ALPHA & OMEGA SEMICONDUCTOR

AONS66520

150V N-Channel AlphaSGT™

General Description

- Trench Power MOSFET - AlphaSGT™ technology
- Low $R_{DS(ON)}$
- Low Gate Charge
- RoHS and Halogen-Free Compliant

Applications

- Adaptors SR MOSFET

Product Summary

V_{DS}	150V
I_D (at V_{GS}=10V)	100A
$R_{DS(ON)}$ (at V_{GS}=10V)	< 9.5mΩ
$R_{DS(ON)}$ (at V_{GS}=4.5V)	< 12mΩ

100% UIS Tested
100% Rg Tested

Green Product

DFN5x6

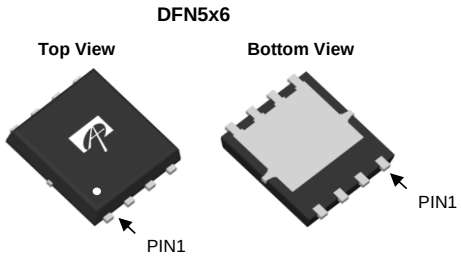

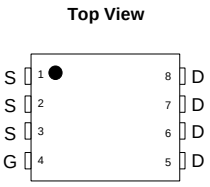

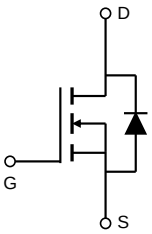

Orderable Part Number	Package Type	Form	Minimum Order Quantity
AONS66520	DFN 5X6	Tape & Reel	3000

Absolute Maximum Ratings T_A=25°C unless otherwise noted

Parameter		Symbol	Maximum	Units
Drain-Source Voltage		V_{DS}	150	V
Gate-Source Voltage		V_{GS}	±20	V
Continuous Drain Current	T_C=25°C	I_D	100	A
	T_C=100°C		64	
Pulsed Drain Current [C]		I_{DM}	400	
Continuous Drain Current	T_A=25°C	I_{DSM}	17	A
	T_A=70°C		13	
Avalanche Current [C]		I_{AS}	50	A
Avalanche energy L=0.1mH [C]		E_{AS}	125	mJ
Diode reverse recovery V_{DS}=0 to 75V,I_F<=10A,Tj=25°C		dv/dt	30	V/ns
		di/dt	500	A/us
Power Dissipation [B]	T_C=25°C	P_D	215	W
	T_C=100°C		86	
Power Dissipation [A]	T_A=25°C	P_{DSM}	6.2	W
	T_A=70°C		4	
Junction and Storage Temperature Range		T_J, T_{STG}	-55 to 150	°C

Thermal Characteristics

Parameter		Symbol	Typ	Max	Units
Maximum Junction-to-Ambient [A]	t ≤ 10s	$R_{\theta JA}$	15	20	°C/W
Maximum Junction-to-Ambient [A D]	Steady-State		40	50	°C/W
Maximum Junction-to-Case	Steady-State	$R_{\theta JC}$	0.43	0.58	°C/W

Electrical Characteristics (T_J=25°C unless otherwise noted)

Symbol	Parameter	Conditions	Min	Typ	Max	Units
STATIC PARAMETERS						
BV_{DSS}	Drain-Source Breakdown Voltage	I_D=250µA, V_{GS}=0V	150			V
I_{DSS}	Zero Gate Voltage Drain Current	V_{DS}=150V, V_{GS}=0V			1	µA
		T_J=55°C			5	
I_{GSS}	Gate-Body leakage current	V_{DS}=0V, V_{GS}=±20V			±100	nA
$V_{GS(th)}$	Gate Threshold Voltage	V_{DS}=V_{GS}, I_D=250µA	1.6	2.1	2.6	V
$R_{DS(ON)}$	Static Drain-Source On-Resistance	V_{GS}=10V, I_D=20A		7.9	9.5	mΩ
		T_J=125°C		14	17	
		V_{GS}=4.5V, I_D=20A		9.5	12	mΩ
g_{FS}	Forward Transconductance	V_{DS}=5V, I_D=20A		100		S
V_{SD}	Diode Forward Voltage	I_S=1A, V_{GS}=0V		0.7	1	V
I_S	Maximum Body-Diode Continuous Current				100	A
DYNAMIC PARAMETERS						
C_{iss}	Input Capacitance	V_{GS}=0V, V_{DS}=75V, f=1MHz		3200		pF
C_{oss}	Output Capacitance			380		pF
C_{rss}	Reverse Transfer Capacitance			4.5		pF
R_g	Gate resistance	f=1MHz	0.6	1.3	2	Ω
SWITCHING PARAMETERS						
Q_g(10V)	Total Gate Charge	V_{GS}=10V, V_{DS}=75V, I_D=20A		44	65	nC
Q_{gs}	Gate Source Charge			10		nC
Q_{gd}	Gate Drain Charge			7		nC
Q_{oss}	Output Charge	V_{GS}=0V, V_{DS}=75V		130		nC
$t_{D(on)}$	Turn-On DelayTime	V_{GS}=10V, V_{DS}=75V, R_L=3.75Ω, R_{GEN}=3Ω		13		ns
t_r	Turn-On Rise Time			4.5		ns
$t_{D(off)}$	Turn-Off DelayTime			40		ns
t_f	Turn-Off Fall Time			13		ns
t_{rr}	Body Diode Reverse Recovery Time	I_F=20A, di/dt=500A/µs		66		ns
Q_{rr}	Body Diode Reverse Recovery Charge	I_F=20A, di/dt=500A/µs		570		nC

A. The value of $R_{\theta JA}$ is measured with the device mounted on 1in² FR-4 board with 2oz. Copper, in a still air environment with T_A =25° C. The Power dissipation P_{DSM} is based on $R_{\theta JA}$ t≤ 10s and the maximum allowed junction temperature of 150° C. The value in any given application depends on the user's specific board design.
B. The power dissipation P_D is based on $T_{J(MAX)}$=150° C, using junction-to-case thermal resistance, and is more useful in setting the upper dissipation limit for cases where additional heatsinking is used.
C. Single pulse width limited by junction temperature $T_{J(MAX)}$=150° C.
D. The $R_{\theta JA}$ is the sum of the thermal impedance from junction to case $R_{\theta JC}$ and case to ambient.
E. The static characteristics in Figures 1 to 6 are obtained using <300µs pulses, duty cycle 0.5% max.
F. These curves are based on the junction-to-case thermal impedance which is measured with the device mounted to a large heatsink, assuming a maximum junction temperature of $T_{J(MAX)}$=150° C. The SOA curve provides a single pulse rating.
G. The maximum current rating is package limited.
H. These tests are performed with the device mounted on 1 in² FR-4 board with 2oz. Copper, in a still air environment with T_A=25° C.

APPLICATIONS OR USES AS CRITICAL COMPONENTS IN LIFE SUPPORT DEVICES OR SYSTEMS ARE NOT AUTHORIZED. AOS DOES NOT ASSUME ANY LIABILITY ARISING OUT OF SUCH APPLICATIONS OR USES OF ITS PRODUCTS. AOS RESERVES THE RIGHT TO MAKE CHANGES TO PRODUCT SPECIFICATIONS WITHOUT NOTICE. IT IS THE RESPONSIBILITY OF THE CUSTOMER TO EVALUATE SUITABILITY OF THE PRODUCT FOR THEIR INTENDED APPLICATION. CUSTOMER SHALL COMPLY WITH APPLICABLE LEGAL REQUIREMENTS, INCLUDING ALL APPLICABLE EXPORT CONTROL RULES, REGULATIONS AND LIMITATIONS.

AOS' products are provided subject to AOS' terms and conditions of sale which are set forth at:
http://www.aosmd.com/terms_and_conditions_of_sale

TYPICAL ELECTRICAL AND THERMAL CHARACTERISTICS

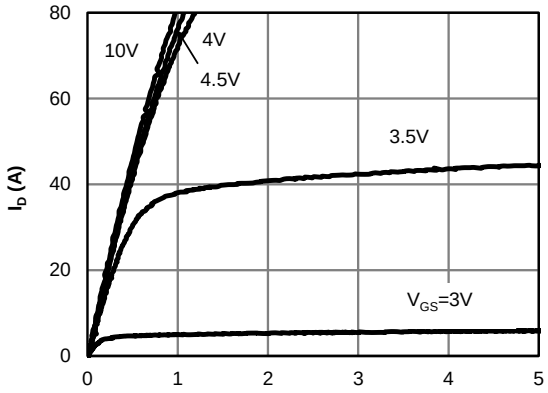

Figure 1: On-Region Characteristics (Note E)

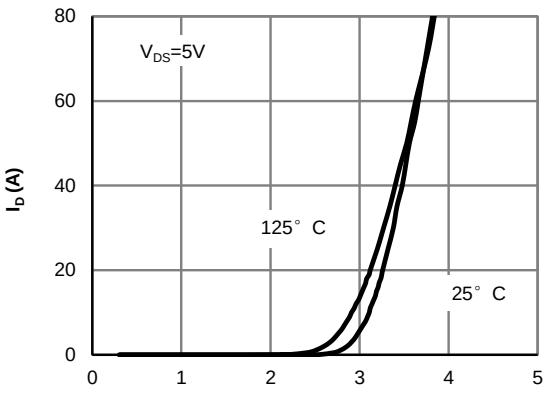

Figure 2: Transfer Characteristics (Note E)

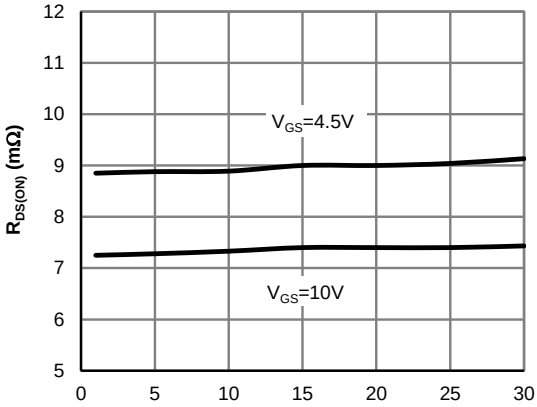

Figure 3: On-Resistance vs. Drain Current and Gate Voltage (Note E)

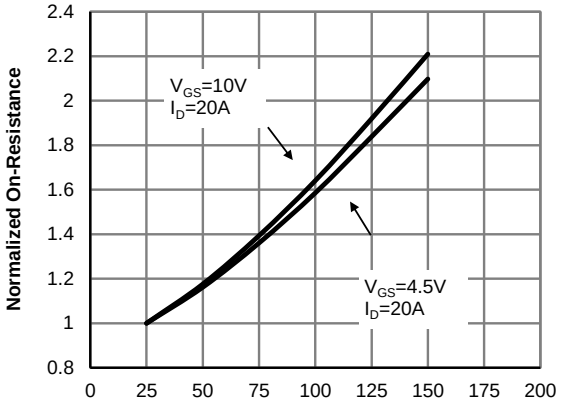

Figure 4: On-Resistance vs. Junction Temperature (Note E)

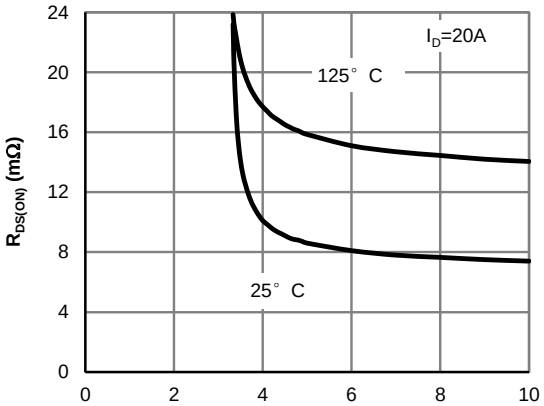

Figure 5: On-Resistance vs. Gate-Source Voltage (Note E)

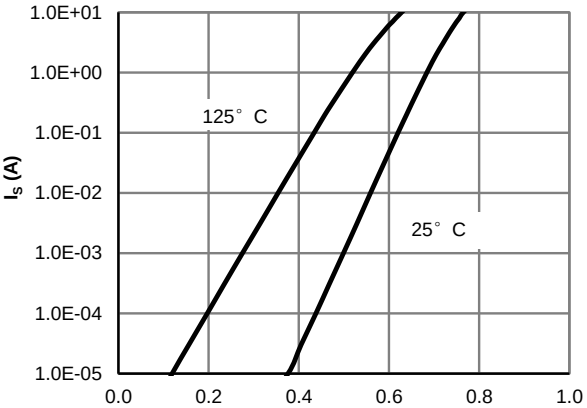

Figure 6: Body-Diode Characteristics (Note E)

TYPICAL ELECTRICAL AND THERMAL CHARACTERISTICS

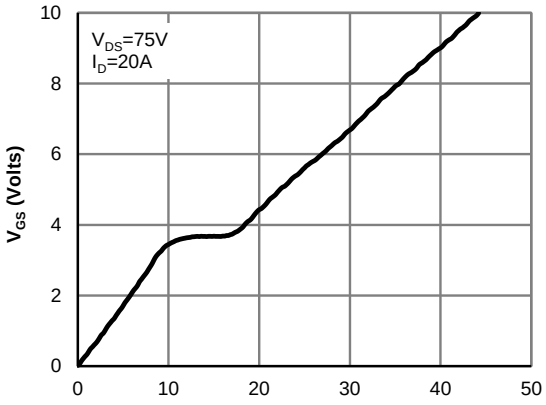

Figure 7: Gate-Charge Characteristics

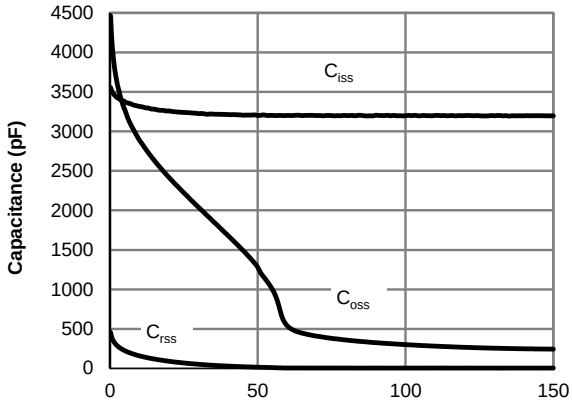

Figure 8: Capacitance Characteristics

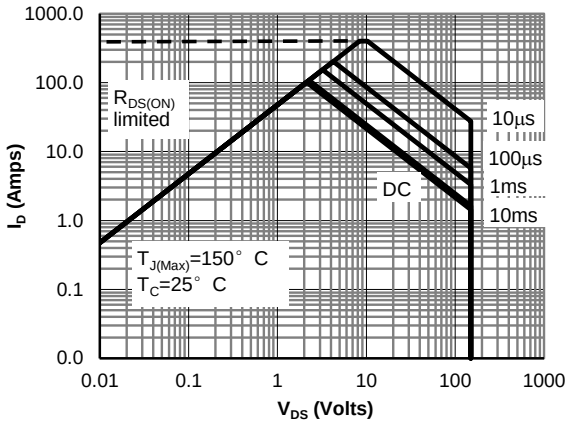

V_{GS}> or equal to 4.5V
Figure 9: Maximum Forward Biased Safe Operating Area (Note F)

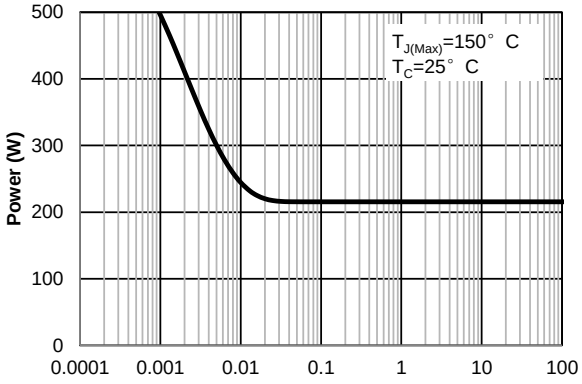

Figure 10: Single Pulse Power Rating Junction-to-Case (Note F)

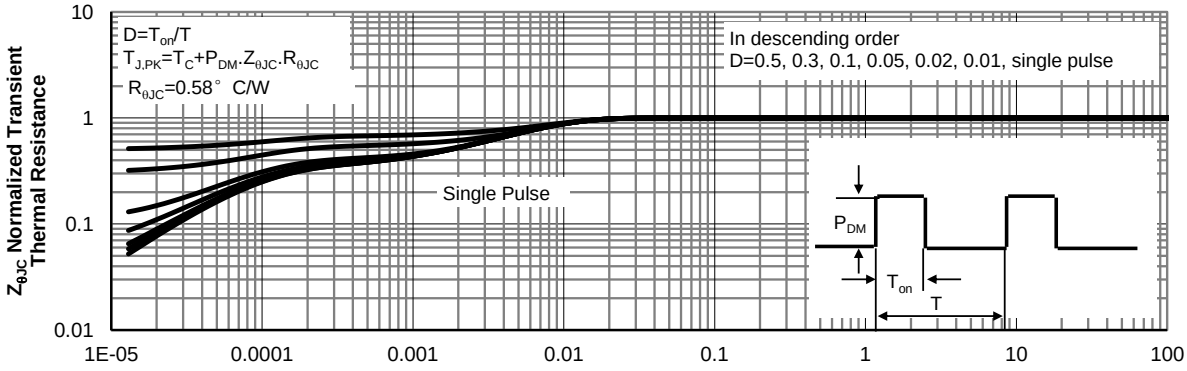

Figure 11: Normalized Maximum Transient Thermal Impedance (Note F)

TYPICAL ELECTRICAL AND THERMAL CHARACTERISTICS

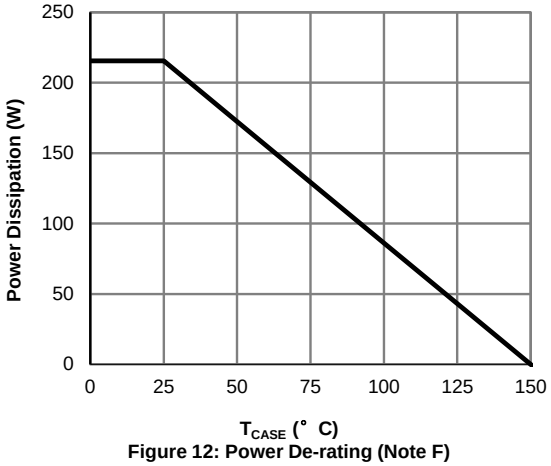

Figure 12: Power De-rating (Note F)

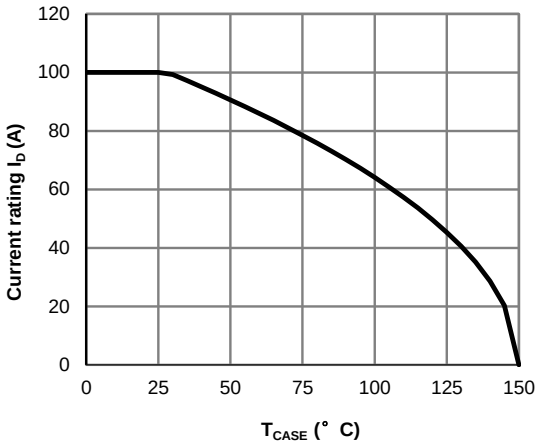

Figure 13: Current De-rating (Note F)

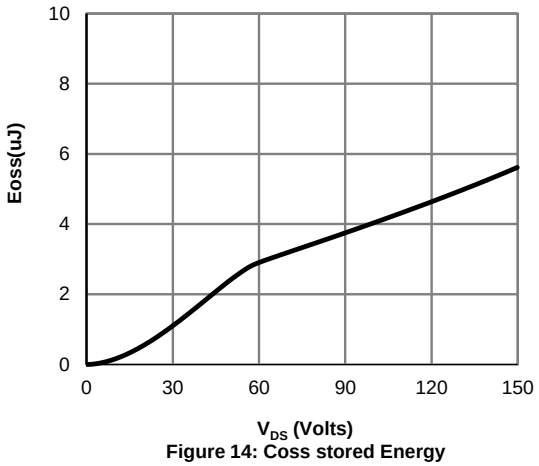

Figure 14: Coss stored Energy

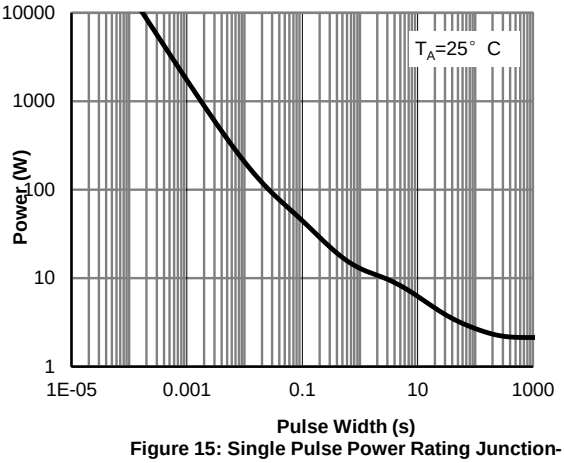

Figure 15: Single Pulse Power Rating Junction-to-Ambient (Note H)

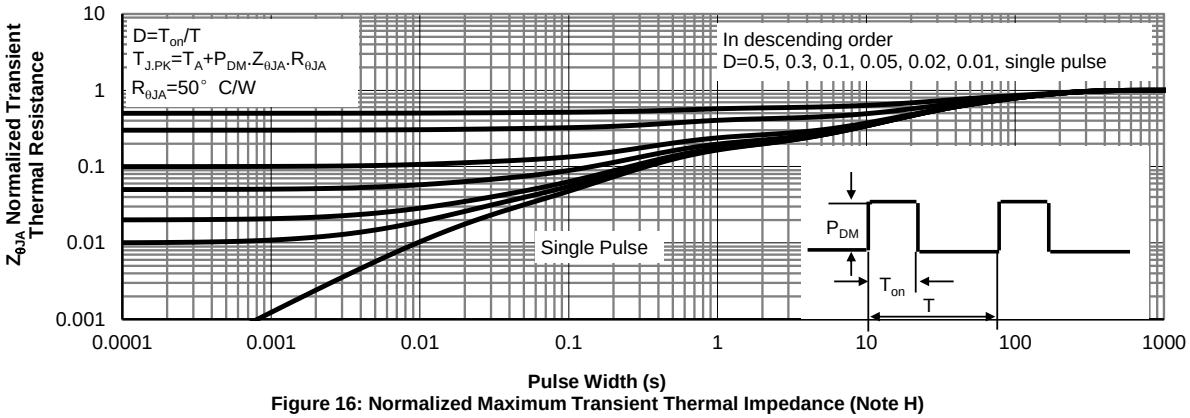

Figure 16: Normalized Maximum Transient Thermal Impedance (Note H)

Figure A: Gate Charge Test Circuit & Waveforms

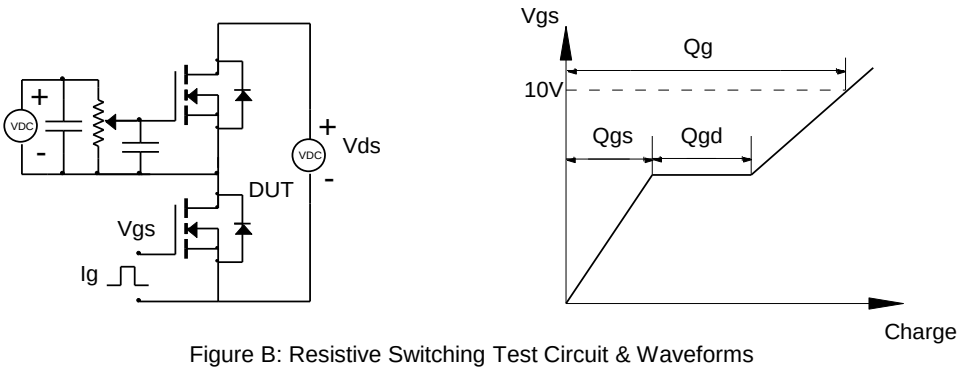

Figure B: Resistive Switching Test Circuit & Waveforms

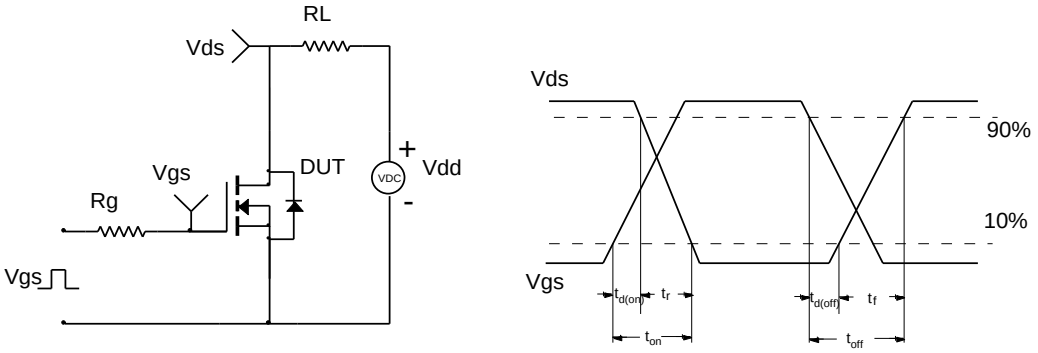

Figure C: Unclamped Inductive Switching (UIS) Test Circuit & Waveforms

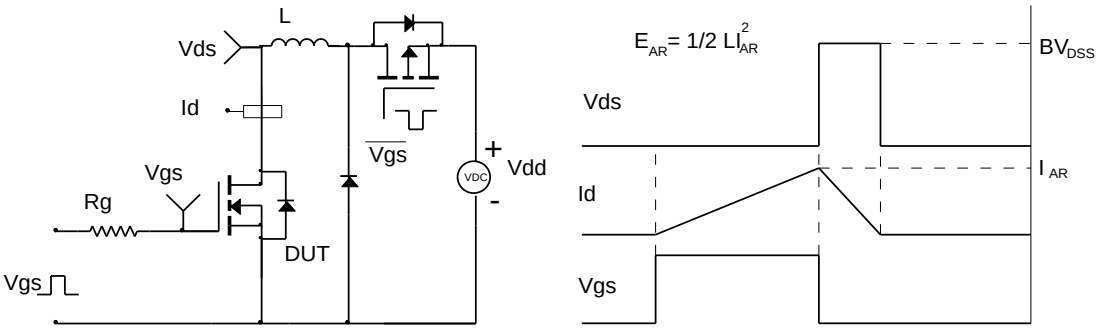

Figure D: Diode Recovery Test Circuit & Waveforms

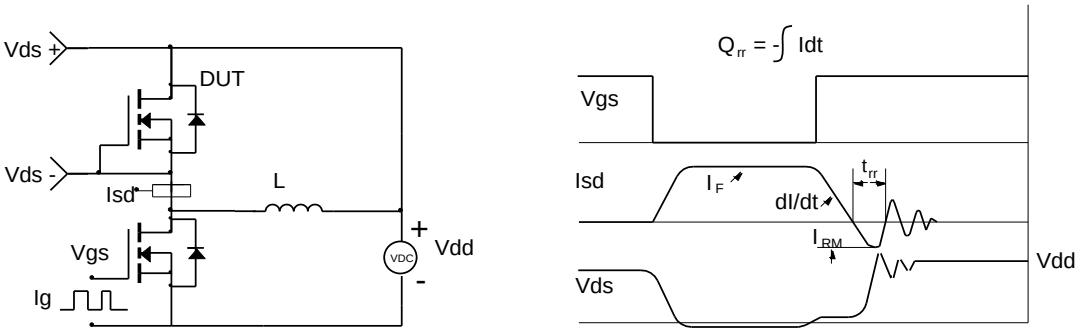

ALPHA & OMEGA SEMICONDUCTOR

Document No.	PD-03362
Version	A
Title	AONS66520 Marking Description

DFN5x6 PACKAGE MARKING DESCRIPTION

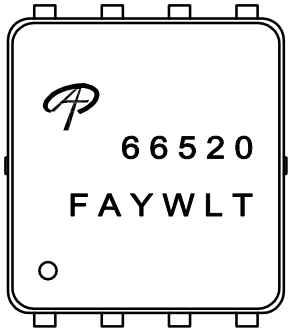

Green product

NOTE:

LOGO	- AOS Logo
66520	- Part number code
F	- Fab code
A	- Assembly location code
Y	- Year code
W	- Week code
L&T	- Assembly lot code

PART NO.	DESCRIPTION	CODE
AONS66520	Green product	66520

ALPHA & OMEGA SEMICONDUCTOR

Document No.	PO-00044
Version	I

DFN5x6_8L_EP1_P PACKAGE OUTLINE

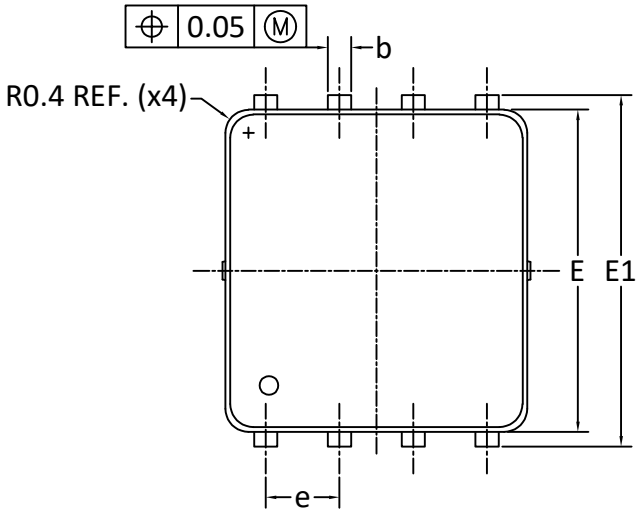

TOP VIEW

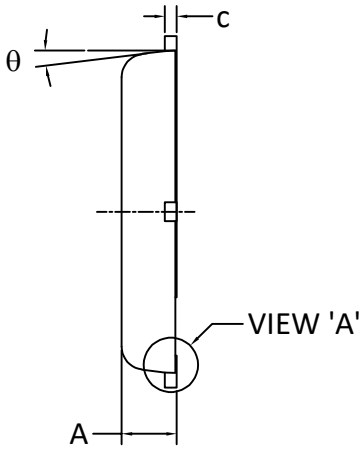

SIDE VIEW

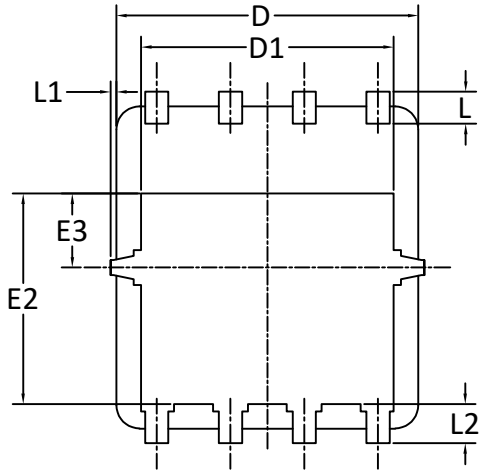

BOTTOM VIEW

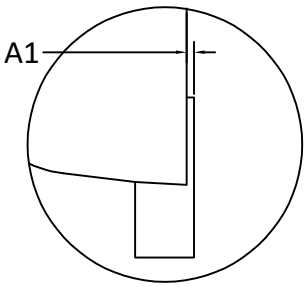

VIEW 'A'
(SCALE 5:1)

RECOMMENDED LAND PATTERN

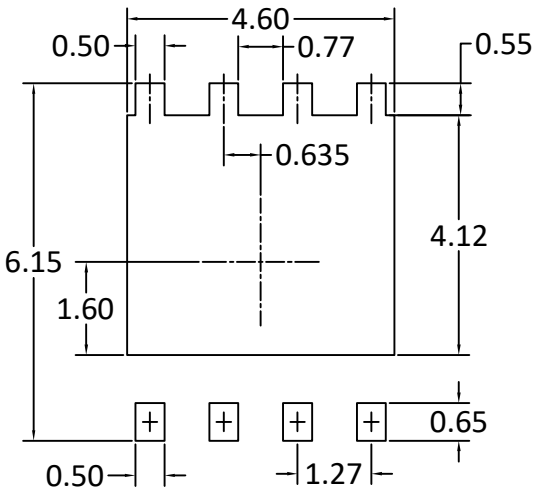

UNIT: mm

SYMBOLS	DIMENSION IN MM			DIMENSION IN INCHES		
	MIN	NOM	MAX	MIN	NOM	MAX
A	0.85	0.95	1.00	0.033	0.037	0.039
A1	0.00	-	0.05	0.000	-	0.002
b	0.30	0.40	0.50	0.012	0.016	0.020
c	0.15	0.20	0.25	0.006	0.008	0.010
D	5.10	5.20	5.30	0.201	0.205	0.209
D1	4.25	4.35	4.45	0.167	0.171	0.175
E	5.45	5.55	5.65	0.215	0.219	0.222
E1	5.95	6.05	6.15	0.234	0.238	0.242
E2	3.525	3.625	3.725	0.139	0.143	0.147
E3	1.175	1.275	1.375	0.046	0.050	0.054
e	1.27 BSC			0.050 BSC		
L	0.45	0.55	0.65	0.018	0.022	0.026
L1	0.00	-	0.15	0.000	-	0.006
L2	0.68 REF			0.027 REF		
θ	0°	-	10°	0°	-	10°

NOTE:
1. PACKAGE BODY SIZES EXCLUDE MOLD FLASH AND GATE BURRS.
   MOLD FLASH AT THE NON-LEAD SIDES SHOULD BE LESS THAN 6 MILS EACH.
2. CONTROLLING DIMENSION IS MILLIMETER.
   CONVERTED INCH DIMENSIONS ARE NOT NECESSARILY EXACT.
3. THIS PACKAGE WAS QUALIFIED USING IR REFLOW PROCESS (JEDEC STANDARD). FOR USAGE IN OTHER SOLDERING PROCESSES, PLEASE CONTACT LOCAL AOS REPRESENTATIVES.

ALPHA & OMEGA SEMICONDUCTOR

Alpha & Omega Semiconductor Product Reliability Report

AONS66520, rev A

Plastic Encapsulated Device

ALPHA & OMEGA Semiconductor, Inc

www.aosmd.com

Jun, 2020

ALPHA & OMEGA SEMICONDUCTOR

This AOS product reliability report summarizes the qualification result for AONS66520. Accelerated environmental tests are performed on a specific sample size, and then followed by electrical test at end point. Review of final electrical test result confirms that AONS66520 passes AOS quality and reliability requirements. The released product will be categorized by the process family and be routine monitored for continuously improving the product quality.

I. Reliability Stress Test Summary and Results

Test Item	Test Condition	Time Point	Total Sample Size	Number of Failures	Reference Standard
HTGB	Temp = 150°C , Vgs=100% of Vgsmax	168 / 500 / 1000 hours	462 pcs	0	JESD22-A108
HTRB	Temp = 150°C , Vds=100% of Vdsmax	168 / 500 / 1000 hours	462 pcs	0	JESD22-A108
Precondition (Note A)	168hr 85°C / 85%RH + 3 cycle reflow@260°C (MSL 1)	-	3927 pcs	0	JESD22-A113
HAST	130°C , 85%RH, 33.3 psia, Vds = 80% of Vdsmax up to 42V	96 hours	693 pcs	0	JESD22-A110
Autoclave	121°C , 29.7psia, RH=100%	96 hours	924 pcs	0	JESD22-A102
Temperature Cycle	-65°C to 150°C , air to air,	1000 cycles	924 pcs	0	JESD22-A104
HTSL	Temp = 150°C	1000 hours	693 pcs	0	JESD22-A103
IOL	∆ Tj = 100°C	15000 cycles	693 pcs	0	MIL-STD-750 Method 1037

Note: The reliability data presents total of available generic data up to the published date.
Note A: MSL (Moisture Sensitivity Level) 1 based on J-STD-020

II. Reliability Evaluation

FIT rate (per billion): 3.82
MTTF = 29919 years

The presentation of FIT rate for the individual product reliability is restricted by the actual burn-in sample size. Failure Rate Determination is based on JEDEC Standard JESD 85. FIT means one failure per billion hours.

Failure Rate = $Chi^2 \times 10^9$ **/ [**2 (N) (H) (Af)**] =** 3.82
MTTF = 10^9 / FIT =29919 years
Chi² = Chi Squared Distribution, determined by the number of failures and confidence interval
N = Total Number of units from burn-in tests
H = Duration of burn-in testing
Af = Acceleration Factor from Test to Use Conditions (Ea = 0.7eV and Tuse = 55°C)
Acceleration Factor [**Af**] = **Exp** [Ea / **k** (1/Tj u – 1/Tj s)]

Acceleration Factor ratio list:

	55 deg C	70 deg C	85 deg C	100 deg C	115 deg C	130 deg C	150 deg C
Af	259	87	32	13	5.64	2.59	1

Tj s = Stressed junction temperature in degree (Kelvin), K = C+273.16
Tj u =The use junction temperature in degree (Kelvin), K = C+273.16
k = Boltzmann's constant, 8.617164 X 10^{-5}eV / K

DFN5x6 Tape and Reel Data

DFN5x6 Carrier Tape

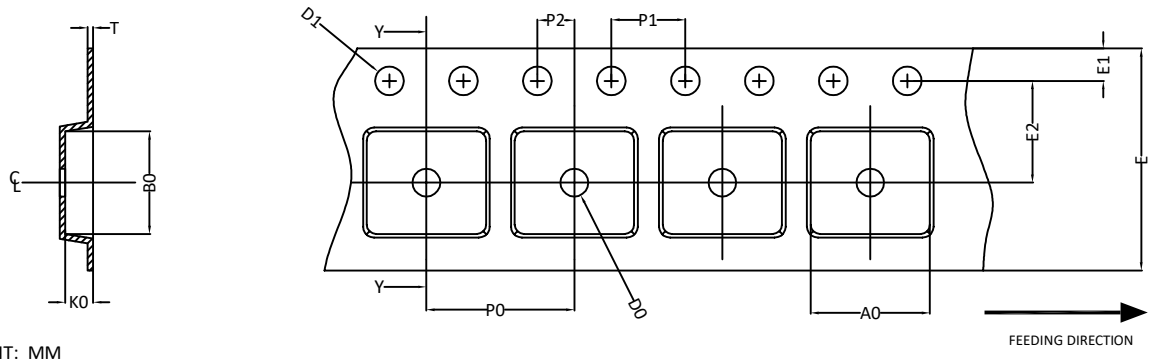

UNIT: MM

PACKAGE	A0	B0	K0	D0	D1	E	E1	E2	P0	P1	P2	T
DFN5x6 (12 mm)	6.30 ±0.10	5.45 ±0.10	1.30 ±0.10	1.50 MIN.	1.55 ±0.05	12.00 ±0.30	1.75 ±0.10	5.50 ±0.10	8.00 ±0.10	4.00 ±0.10	2.00 ±0.10	0.30 ±0.05

DFN5x6 Reel

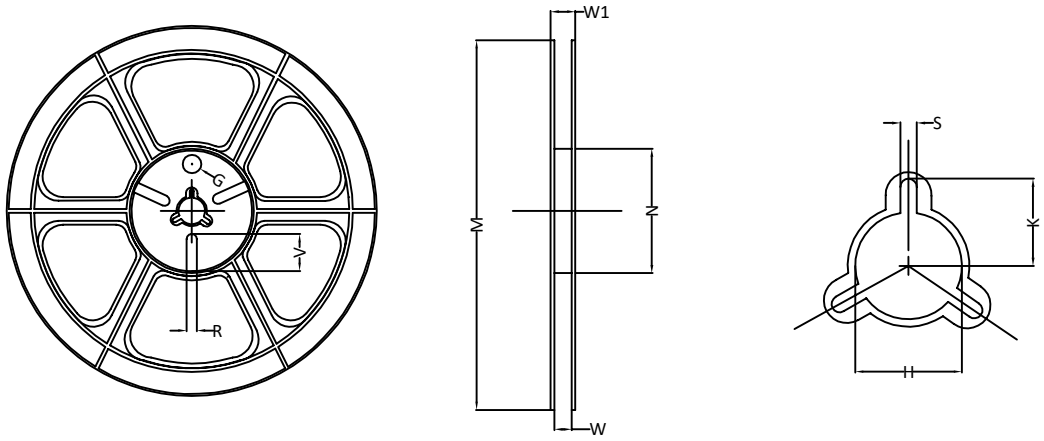

UNIT: MM

TAPE SIZE	REEL SIZE	M	N	W	W1	H	K	S	G	R	V
12 mm	Ø330	Ø330.00 ±0.50	Ø97.00 ±0.10	13.00 ±0.30	17.40 ±1.00	Ø13.00 +0.50 -0.20	10.60	2.00 ±0.50	---	---	---

DFN5x6_Punch Package Tape

Leader / Trailer & Orientation

Unit Per Reel: 3000pcs

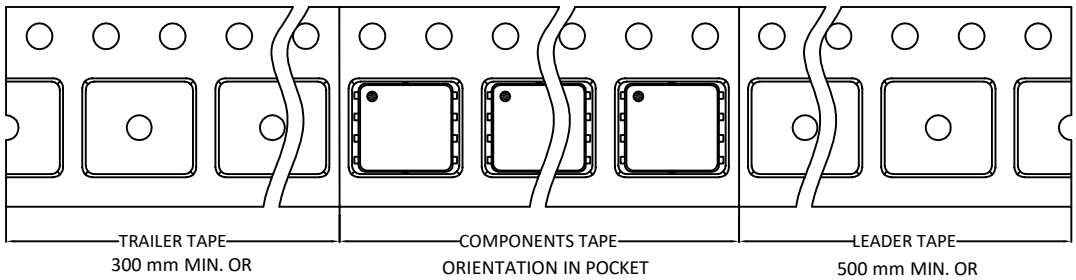

DFN5x6_Sawing Package (Except DFN5x6_7L_EP1_TEP1_S/DFN5x6_2L_EP3_TEP1_S /DFN5x6_8L_EP1_TEP1_S/DFN5x6_8L_EP1_TEP2_S/DFN5x6_8L_EP2_TEP1_S/ DFN5x6A_8L_EP2_TEP1_S)Tape

Leader / Trailer & Orientation

Unit Per Reel: 3000pcs

