AOZ1356DI

5V/3.5A ECPower™ Protection Switch Supporting USB PD Fast Role Swap

ALPHA & OMEGA SEMICONDUCTOR

General Description

The AOZ1356DI is a current-limiting protection switch targeting applications that require comprehensive protections. For AOZ1356DI-01 and -02 the input operating voltage range is 3.4V to 5.5V, and for AOZ1356DI-05 and -06, the input operating voltage range is between 3.6V and 5.3V. The output terminal is rated 28V absolute maximum. The internal current-limiting circuit protects the supply from large load current. The current limit level is set with an external resistor. The internal soft-start circuit controls inrush current due to highly capacitive loads. The device features very low quiescent current. The supply current reduces to 6µA in shut-down. It also has under-voltage lockout (UVLO), over-voltage protection (OVP) and thermal shutdown protection.

The AOZ1356DI has True Reverse-Current Blocking (TRCB) protection to avoid undesired reverse-current from VOUT to VIN.

The AOZ1356DI supports USB PD Fast Role Swap. When FON pin is high, the device is in fast turn-on mode to ensure output voltage rises quickly to meet USB PD spec. The device also features fast recovery to turn on power switch once reverse current blocking protection is de-activated.

The AOZ1356DI is available in 3mm x 3mm 12-Pin DFN package.

Features

- 28V voltage rating on VOUT pin
- Up to 3.5A current capability
- Typical R_{ON}: 39mΩ
- Supports USB PD Fast Role Swap (FRS)
- Programmable current limit
- True Reverse-Current Blocking (TRCB)
- Fast recovery from TRCB
- 125µA quiescent current
- Over-voltage protection (OVP)
- Short-circuit protection (SCP)
- Input under-voltage lockout (UVLO)
- Thermal shutdown protection (TSD)
- ±4kV HBM rating
- ±1kV CDM rating
- IEC61000-4-5: 45V (No Cap)
- IEC61000-4-2 (VOUT Pin): ±8kV
- 3mm x 3mm DFN-12L package
- IEC 62368-1: 2014 Certificate No. US-33248-UL

Applications

- USB PD power source switch
- Smartphones and tablets
- Notebooks, ultra books and desktops
- Portable devices

Green Product

Typical Application

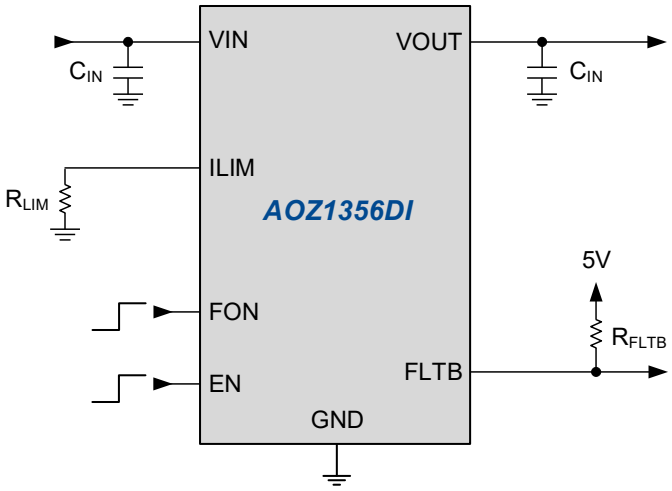

Ordering Information

Part Number	Fault Recovery	Operating Voltage Range	Package	Environmental
AOZ1356DI-01	Auto-Restart	3.4V-5.5V	DFN3x3-12L	RoHS
AOZ1356DI-02	Latch-Off	3.4V-5.5V	DFN3x3-12L	RoHS
AOZ1356DI-05	Auto-Restart	3.6V-5.3V	DFN3x3-12L	RoHS
AOZ1356DI-06	Latch-Off	3.6V-5.3V	DFN3x3-12L	RoHS

All AOS products are offered in packages with Pb-free plating and compliant to RoHS standards. Please visit https://aosmd.com/sites/default/files/media/AOSGreenPolicy.pdf for additional information.

Pin Configuration

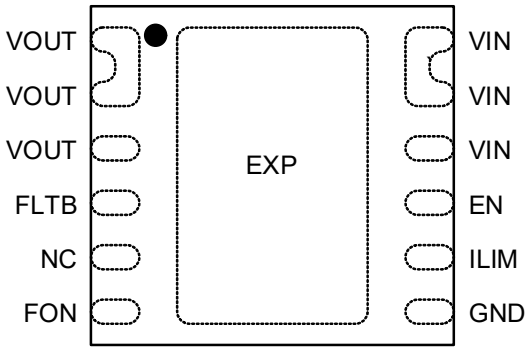

DFN3x3-12L
(Top Transparent View)

Pin Description

Pin Number	Pin Name	Pin Function
1, 2, 3	VOUT	Power output. Connect to adapter. Pin 3 is internally connected to Pins 1 and 2.
4	FLTB	Fault indicator. Open-drain output. Active low.
5	NC	Not connected internally. Leave it floating or connect it to GND.
6	FON	Fast-On. Active high. This pin signals the device that the fast turn-on mode is desired. Internal pulled down with a resistor.
7	GND	Ground.
8	ILIM	Current limit set pin. Connect a 1% resistor R_{LIM} between I_{LIM} and GND to set the current limit threshold.
9	EN	IC Enable. Active high. Internally pulled down with a resistor.
10, 11, 12	VIN	Supply input. Connected to internal power regulator. Pin 10 is internally connected to Pins 11 and 12.
EXP	EXP	Exposed Thermal Pad. Connect to GND. Solder to a metal surface directly underneath the EXP and connect to PCB ground on multiple layers through VIAs. For best thermal performance make the ground copper pads as large as possible and connect to EXP with multiple VIAs.

Absolute Maximum Ratings

Exceeding the Absolute Maximum Ratings may damage the device.

Parameter	Rating
VOUT to GND	-0.3V to +28V
VIN, EN, ILIM, FON, FLTB to GND	-0.3V to +6V
Junction Temperature (T_J)	+150°C
Storage Temperature (T_S)	-65°C to +150°C
ESD Rating HBM/CDM	±4kV / ±1kV

Recommended Operating Ratings

The device is not guaranteed to operate beyond the Maximum Operating Ratings.

Parameter	Rating
VIN to GND	3.4V to 5.5V
FON, EN, FLTB to GND	0V to 5.5V
Switch Current (I_{SW})	0A to 3.5A
ILIM	0V to 2V
Ambient Temperature (T_A)	-40°C to +85°C
Package Thermal Resistance (θ_{JA})	50°C/W

Electrical Characteristics

T_A = 25°C, V_{IN} = 5V, V_{EN} = 5V, V_{FON} = 0V, unless otherwise specified.

Symbol	Parameter	Conditions	Min	Typ	Max	Units
General						
V_{IN}	Input Supply Voltage	AOZ1356DI-01 and -02	3.4		5.5	V
		AOZ1356DI-05 and -06	3.6		5.3	V
V_{UVLO_R}	Under-voltage Lockout Threshold	VIN rising AOZ1356DI-01 and -02	3	3.25	3.35	V
		VIN rising AOZ1356DI-05 and -06	3.2	3.45	3.55	V
V_{UVLO_HYS}	Under-voltage Lockout Hysteresis	VIN falling		150		mV
I_{IN_ON}	Input Quiescent Current	I_{OUT} = 0A, FON = 0V		125		µA
I_{IN_FON}	FON Standby Current	FON = 5V, EN = 0V		135		µA
I_{IN_OFF}	Input Shutdown Current	EN = 0V, FON = 0V		6	10	µA
R_{ON}	Switch On Resistance	I_{OUT} = 1A		39		mΩ
V_{EN_H}	Enable Input Logic High Threshold	EN rising	1.4			V
V_{EN_L}	Enable Input Logic Low Threshold	EN falling			0.4	V
I_{EN_BIAS}	Enable Input Bias Current	EN = 1.8V		1	1.5	µA
V_{FON_H}	Fast-On Logic High Threshold	FON rising	1.4			V
V_{FON_L}	Fast-On Logic Low Threshold	FON falling			0.4	V
I_{FON_BIAS}	Fast-On Input Bias Current	FON = 1.8V		1.5	4.0	µA
V_{FLTB_LO}	FLTB Pull-down Voltage	I_{SINK} = 3mA			0.3	V
Over-Voltage Protection						
$V_{IN_OVLO_R}$	Over-voltage Lockout Threshold	VIN rising AOZ1356DI-01 and -02	5.6	5.8	6	V
$V_{IN_OVLO_R}$		VIN rising AOZ1356DI-05 and -06	5.75	5.9		
$V_{IN_OVLO_HYS}$	Over-voltage Lockout Hysteresis			250		mV
V_{OUT_OVLO}	Output Over-Voltage Lockout Threshold	VOUT rising AOZ1356DI-05 and -06	5.3		5.5	V
t_{DELAY_OVP}	OVP Turn-Off Delay			2		µs

Electrical Characteristics

T_A = 25°C, V_{IN} = 5V, V_{EN} = 5V, V_{FON} = 0V, unless otherwise specified.

Symbol	Parameter	Conditions	Min	Typ	Max	Units
Over-Current Protection						
I_{LIM}	Current Limit Threshold	VOUT = 5V, R_{LIM} = 4.02kΩ	3.15	3.5	3.85	A
		VOUT = 5V, R_{LIM} = 7.15kΩ	1.78	2	2.22	
		VOUT = 5V, R_{LIM} = 14.3kΩ	0.9	1	1.1	
$I_{LIM_FOLDBACK}$	Current Limit Foldback			8(1)		% of I_{LIM}
t_{OCP_FLTB}	Over-Current Flag Delay	From $I_{OUT} \geq I_{LIM}$ to FLTB pulled low		12		ms
True Reverse-Current Blocking						
V_{T_TRCB}	TRCB Protection Trip Point	VOUT-VIN, VOUT rising		25		mV
V_{R_TRCB}	TRCB Protection Release Trip Point	VIN-VOUT, VOUT falling		40		mV
V_{TRCB_HYS}	TRCB Hysteresis	V_{T_TRCB} + V_{R_TRCB}		65		mV
t_{TRCB}	TRCB Response Time			600		ns
$t_{TRCB_RECOVERY}$	TRCB Fast Recovery	C_{OUT} = 1µF, R_L = 100Ω		80		µs
Thermal Shutdown						
T_{SD}	Thermal Shutdown Threshold	Temperature rising		140		°C
T_{SD_HYS}	Thermal Shutdown Hysteresis	Temperature falling		20		
Dynamic Characteristics						
t_{D_ON}	Turn-On Delay Time (From EN 50% to VOUT = 0.5V)	VIN = 5V, R_L = 100Ω, C_{OUT} = 1µF, R_{LIM} = 14.3kΩ		2.1		ms
t_{ON}	Turn-ON Time (VOUT from 0.5V to 4.5V)	VIN = 5V, R_L = 100Ω, C_{OUT} = 1µF, R_{LIM} = 14.3kΩ		2.7		ms
t_{FON}	Fast Turn-On Time (From EN = V_{EN_H} to VOUT = 4.75V)	VIN = 5V, EN = 5V, VFON = 5V, R_L = 100Ω, C_{OUT} =1µF, R_{LIM} = 14.3kΩ		50	100	µs
t_{S_FON}	FON Setup Time prior to EN		100			µs
t_{H_FON}	FON Hold Time after EN		40			µs
Short Circuit Protection (SCP)						
V_{SC_DETECT}	VIN-VOUT difference at which a VOUT short circuit condition is detected			270		mv
$t_{SC_RSPONSE}$	Response time to open the switch after a VOUT short circuit condition is detected	VIN - VOUT > 270mV		1		µs

Note:

1. Guaranteed by characterization and design.

Functional Block Diagram

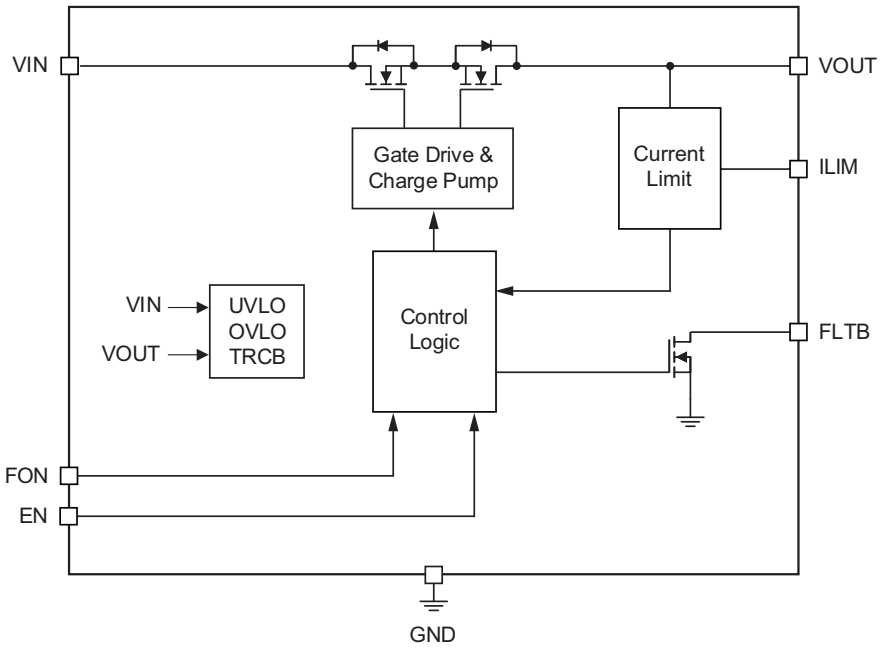

Timing Diagrams

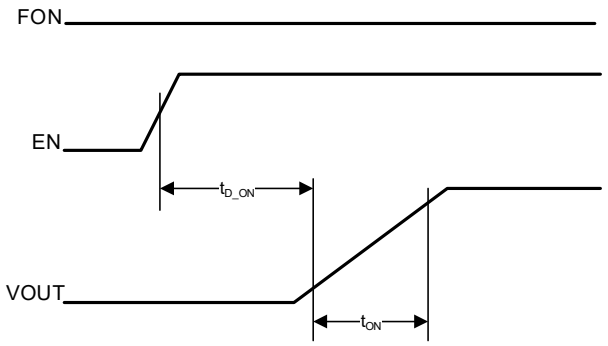

Figure 1. Normal Turn-on Delay and Turn-on Time (V_{FON}=0V)

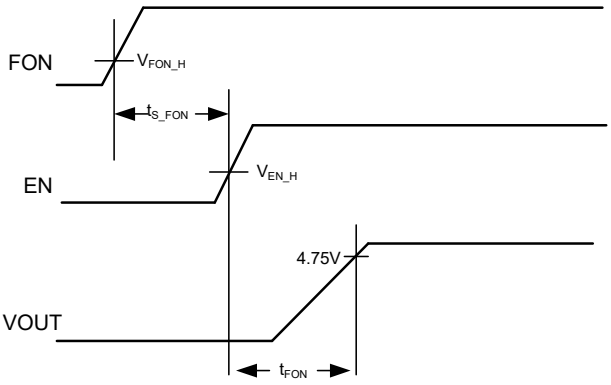

Figure 2. Fast Turn-on Time (VIN=5V)

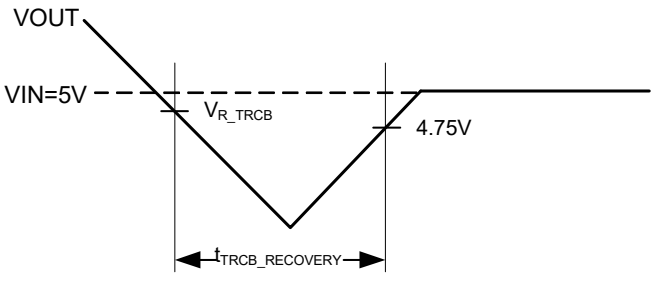

Figure 3. Fast Recovery from t_{RCB}

Timing Diagrams *(Continued)*

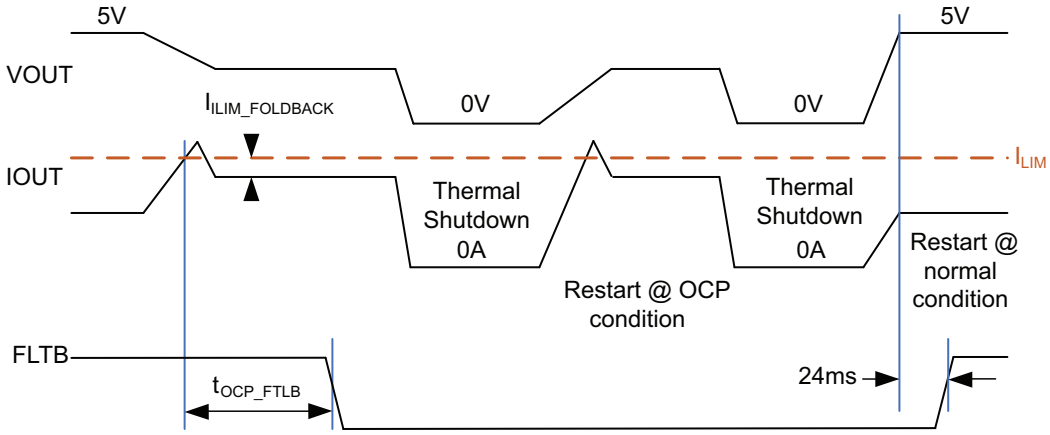

Figure 4. Current Limit (OCP) Operation

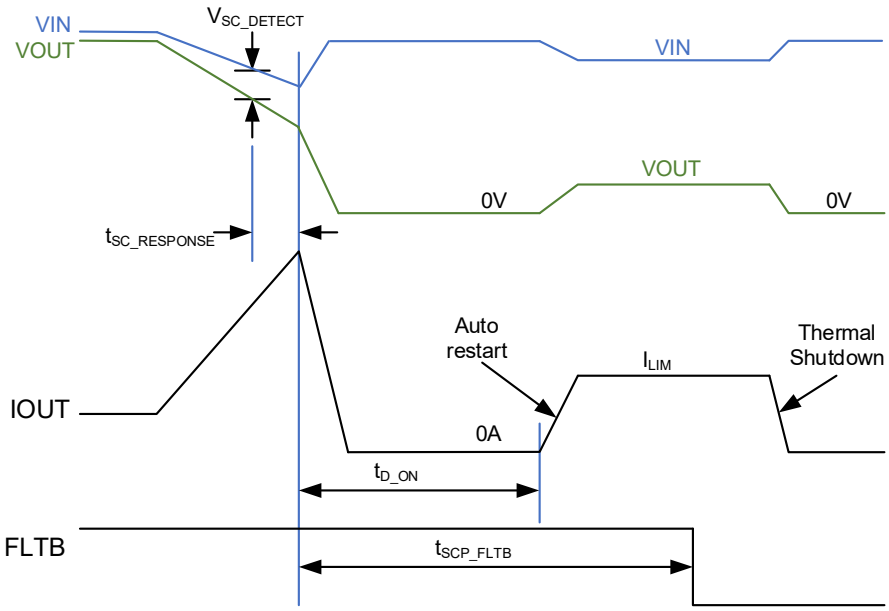

Figure 5. Short Circuit Protection (SCP) Operation

Typical Characteristics

T_A = 25°C, V_{IN} = 5V, C_{IN} = 76µF, C_{OUT} = 9.4µF, FON floating, R_{OVP} = 4.75kΩ, unless otherwise specified.

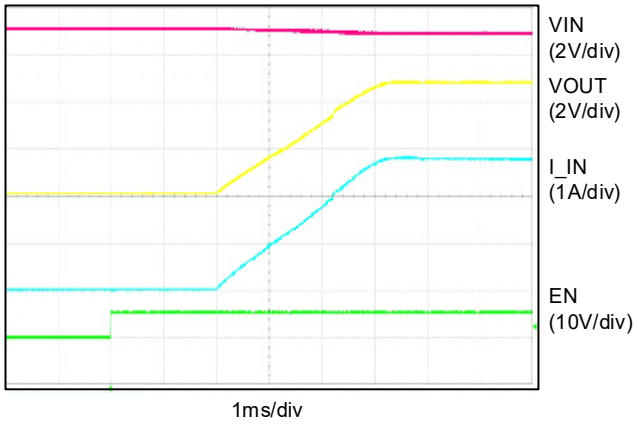

Figure 6. Soft Start by EN (LOAD = 1.8Ω)

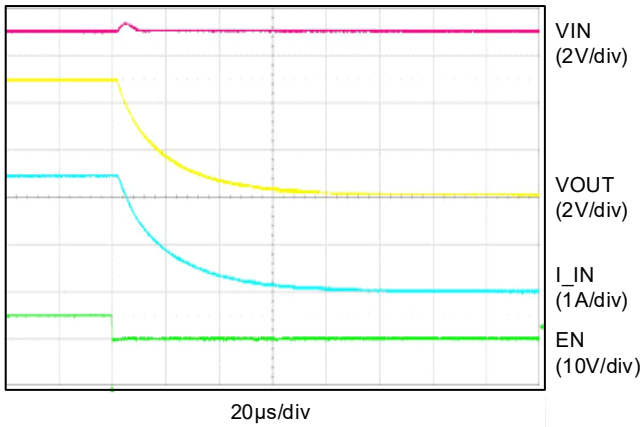

Figure 7. Shutdown by EN (LOAD = 2Ω)

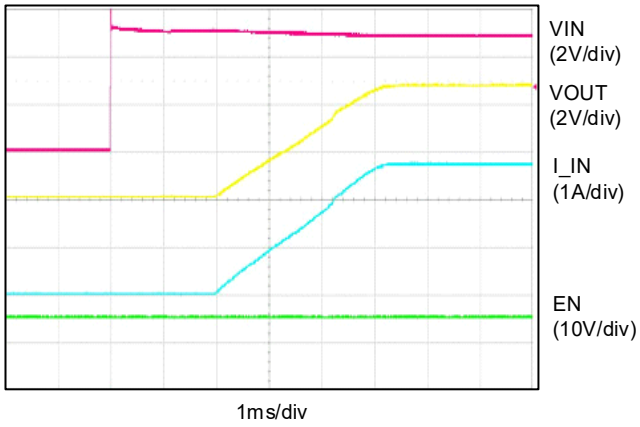

Figure 8. Soft Start by Toggling VIN (LOAD = 1.8Ω)

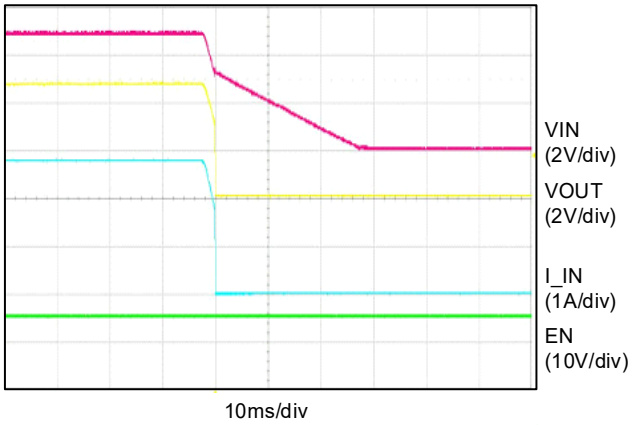

Figure 9. Shutdown by Toggling VIN (LOAD = 1.8Ω)

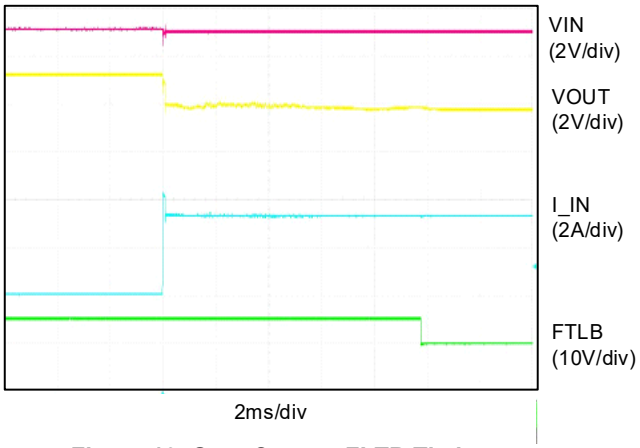

Figure 10. Over Current FLTB Timing (LOAD = 1.2Ω Plugged In)

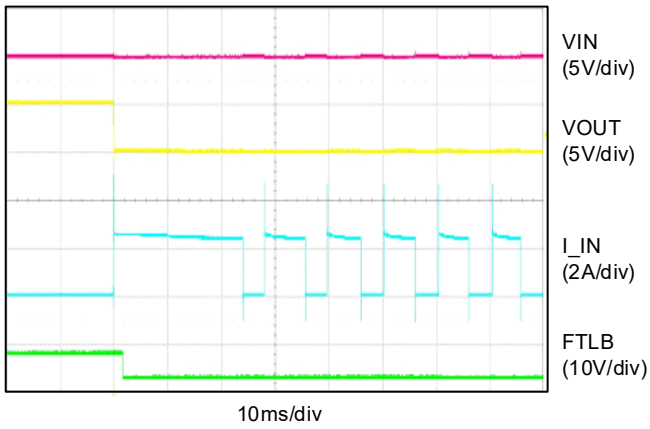

Figure 11. Short Circuit Protection, Thermal Shutdown (Auto Restart)

Typical Characteristics *(continued)*

T_A = 25°C, V_{IN} = 5V, C_{IN} = 76µF, C_{OUT} = 9.4µF, FON floating, R_{OVP} = 4.75kΩ, unless otherwise specified.

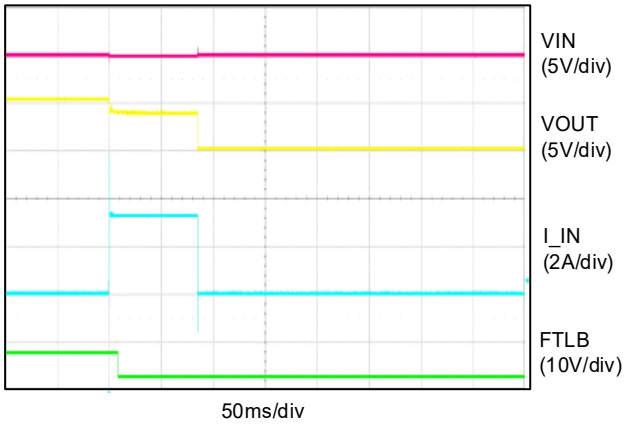

Figure 12. Over Current Protection (Latch-off)

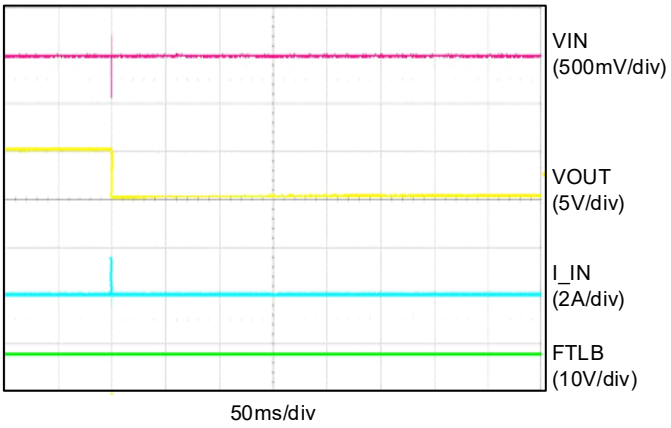

Figure 13. Short Circuit Protection (Latch-off)

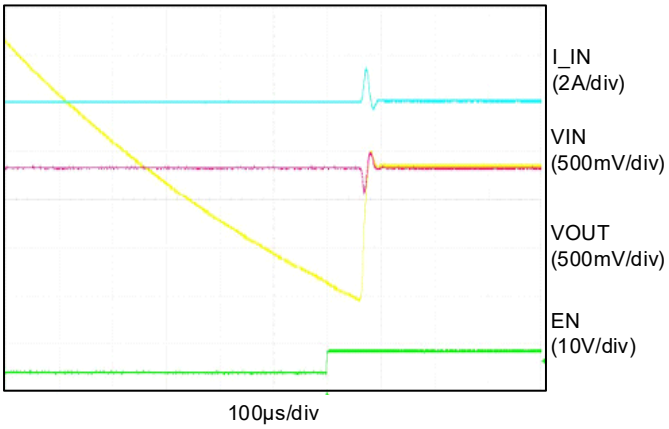

Figure 14. Fast Role Swap (FON = 0V)

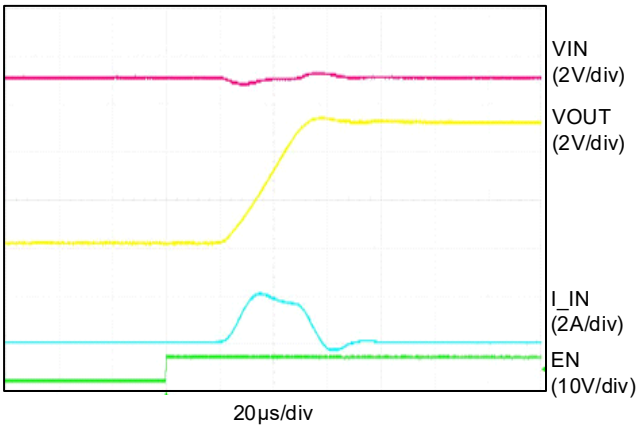

Figure 15. Fast Role Swap (FON = 5V, No Load)

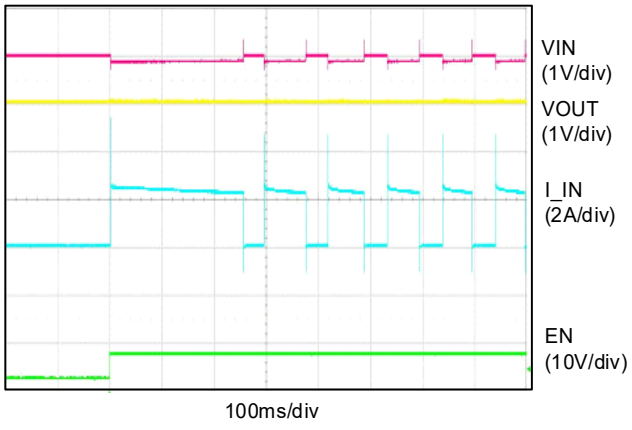

Figure 16. Starting Up Into Shorted Output (Auto Restart)

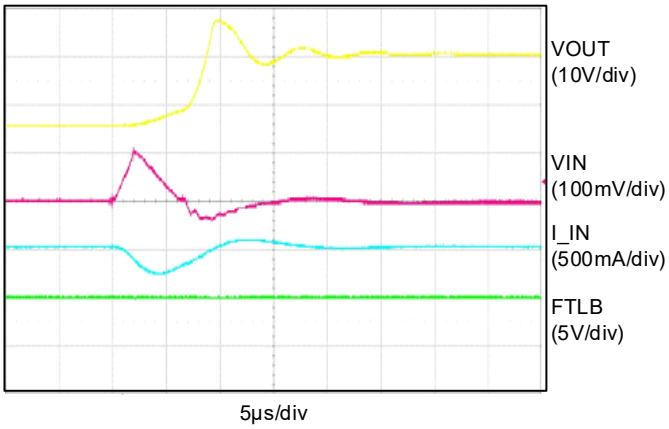

Figure 17. True Reverse Current Blocking (VOUT Shorted to 20V)

Typical Characteristics *(continued)*

T_A = 25°C, V_{IN} = 5V, C_{IN} = 76µF, C_{OUT} = 9.4µF, FON floating, R_{OVP} = 4.75kΩ, unless otherwise specified

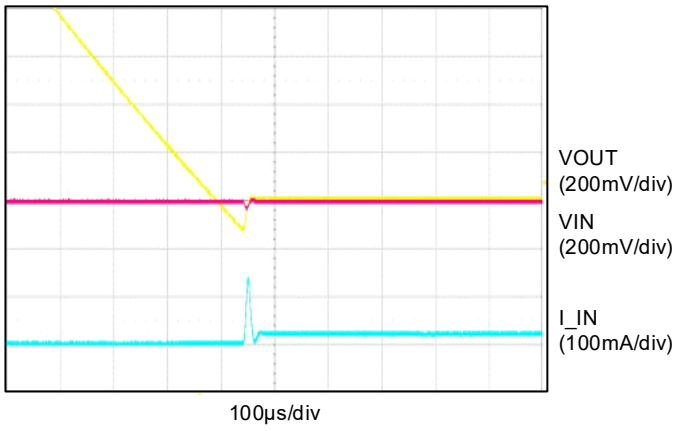

Figure 18. Recovery from True Reverse Current Blocking

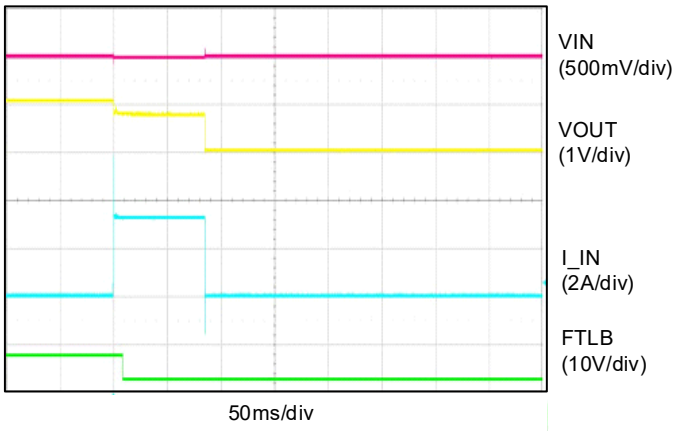

Figure 19. Over Current (R_{LIM} = 14.3kΩ, I_{LIM} = 1.0A) (Latch-off)

Typical Characteristics *(continued)*

T_A = 25°C, V_{IN} = 5V unless otherwise specified.

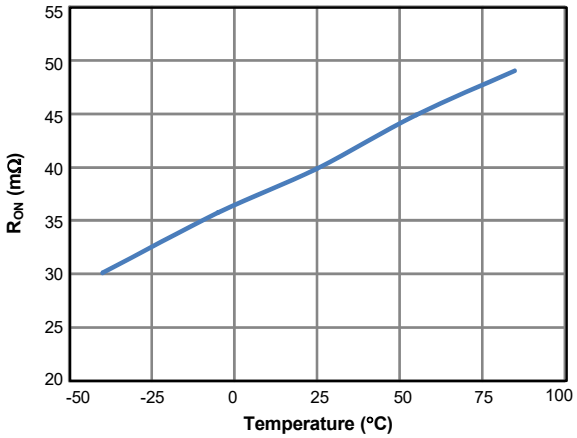

Figure 20. R_{ON} vs. Temperature

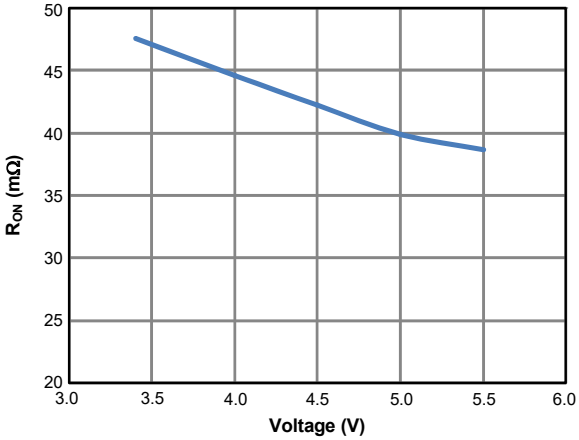

Figure 21. R_{ON} vs. Input Voltage

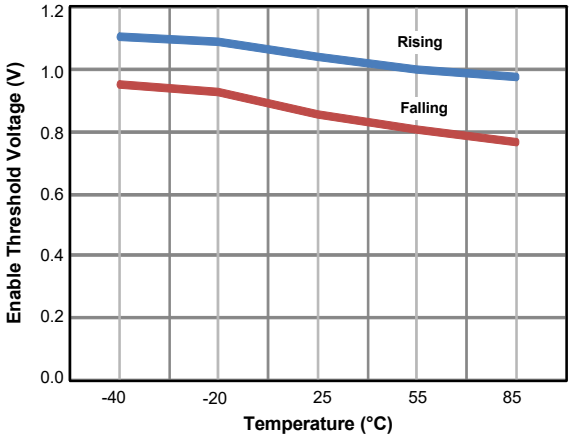

Figure 22. EN Threshold vs. Temperature

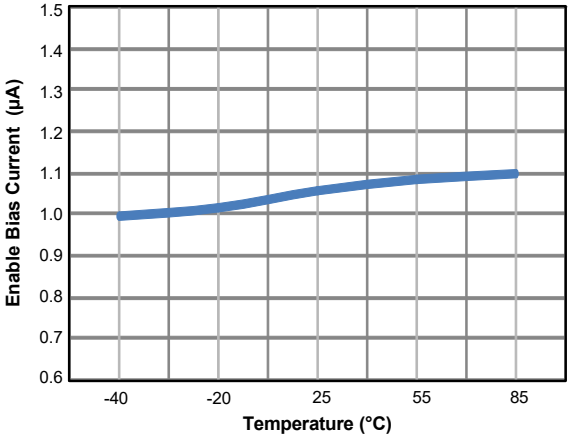

Figure 23. EN Bias Current vs. Temperature

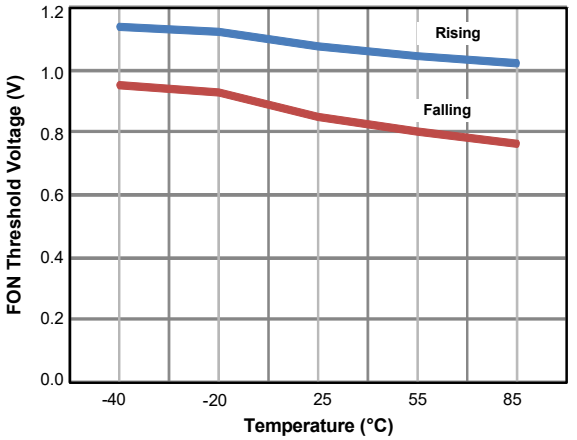

Figure 24. FON Threshold vs. Temperature

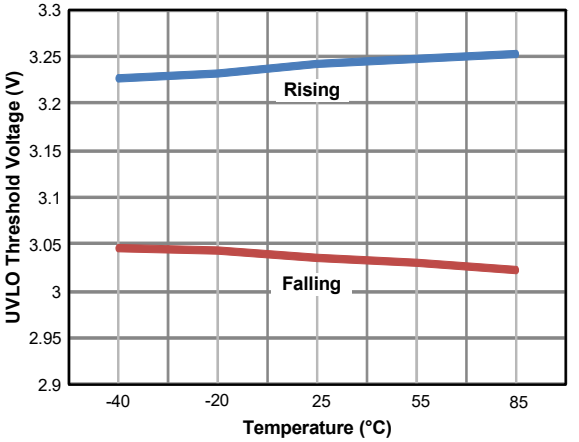

Figure 25. UVLO Threshold vs. Temperature (AOZ1356DI-01, -02)

Typical Characteristics *(continued)*

T_A = 25°C, V_{IN} = 5V unless otherwise specified.

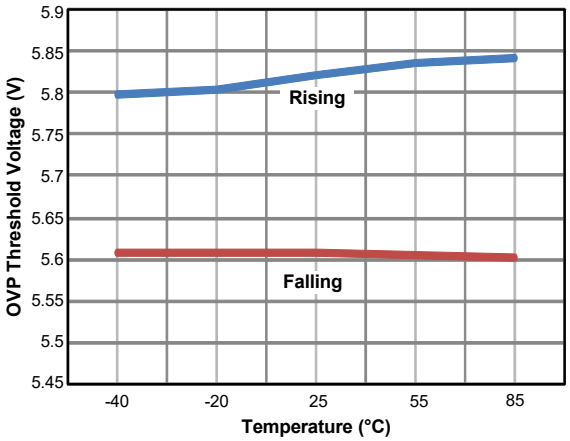

Figure 26. OVP Threshold vs. Temperature (AOZ1356DI-01, -02)

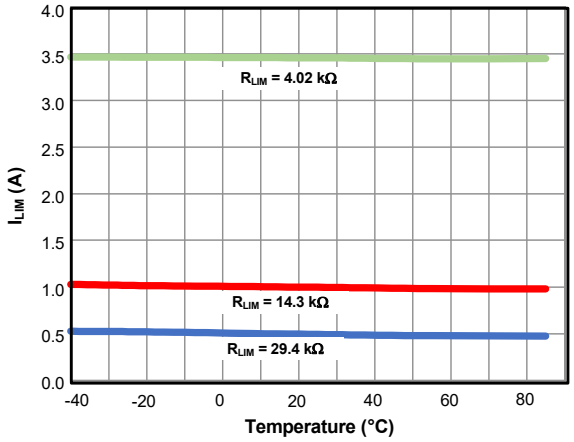

Figure 27. Current Limit Threshold vs. Temperature

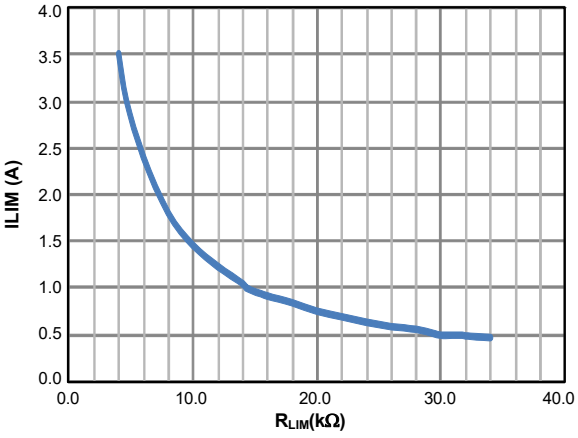

Figure 28. Current Limit vs. R_{LIM}

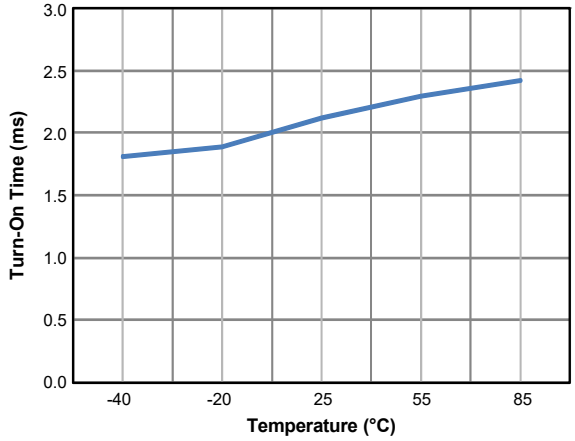

Figure 29. Turn-On Time (t_{ON}) vs. Temperature

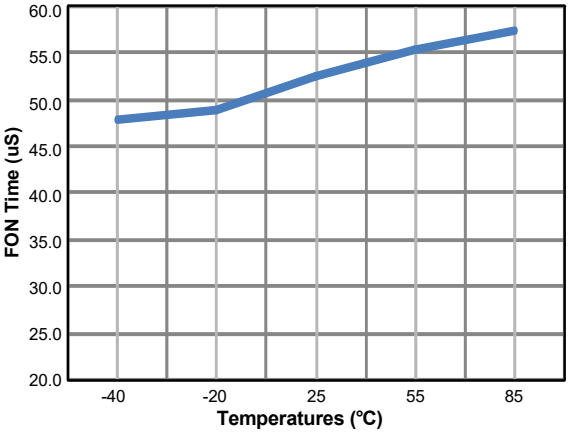

Figure 30. FON Time (t_{FON}) vs. Temperature

Functional Description

The AOZ1356DI is a current limited power switch with over-voltage, over-current, reverse-current and thermal shutdown protections. The VOUT pin is rated 28V. The switch current is rated up to 3.5A.

The device has true reverse-current blocking features that will prevent undesired current flow from output to its input in either enabled or disabled state.

Enable

The EN pin is the ON/OFF control for the power switch. The device is enabled when EN pin is high and not in under-voltage lockout state. The EN pin must be driven to a logic high or logic low state to guarantee operation. While disabled, the AOZ1356DI draws 6µA from supply.

For AOZ1356DI-02, -06 toggle EN pin to restart the device and clear fault flag after device latches off due to fault.

Input Under-Voltage Lockout (UVLO)

The under-voltage lockout (UVLO) circuit monitors the input voltage. The power switch is only allowed to turn on when input voltage is higher than UVLO threshold. Otherwise the switch is off.

Over-Voltage Protection (OVP)

The voltages at VIN terminal is constantly monitored once the device is enabled. In case input voltage exceeds the over-voltage lockout threshold ($V_{IN_OVLO_R}$), the power switch is either turned off immediately or kept off, depending on its initial state. AOZ1356DI-01, -05 can restart when VIN drops below $V_{IN_OVLO_HYS}$.

Programmable Current Limit and Over-Current Protection (OCP)

The AOZ1356DI-01 has current limit feature that ensures the current passing through the switch does not exceed the current limit threshold set by the external resistor R_{LIM}.

The current limit threshold can be estimated using the equations below for the range from 2.5A to 4A:

$$I_{LIM} = 14300/R_{LIM}$$

For example, for 1A current limit threshold, a 14.3kΩ RLIM resistor should be selected. 1% resistor is recommended for RLIM.

For current less than 2.5A, we recommend to use Table 1 value due to second order non-linearity effects:

Table 1. R_{LIM} Resistor Value vs Current Limit Threshold

Typical Current Limit (A)	Resistor Value ±1% (kΩ)
4.0	3.52
3.5	4.02
3.0	4.65
2.5	5.62
2.0	7.15
1.0	14.3
0.5	40.2

AOZ1356DI-01 continuously limits the output current when output is overloaded. Under current-limiting condition, FLTB is pulled low after a 10ms delay (t_{OCP_FLTB}). Severe overload causes power dissipation and die temperature to increase and may trigger thermal shutdown.

Under short circuit condition, FLTB is pulled low after a delay t_{SCP_FLTB}.

$$t_{SCP_FLTB} = t_{OCP_FLTB} + t_{D_ON}$$

Current Limit Foldback

Once the system detects an over current condition, the controlled current is reduced (folded back) by 8% from the RLIM set point. For example, if the I_{LIM} = 3A, then after detecting current limit the current is regulated to 8% lower or 2.76A.

The AOZ1356DI-01 has a blank out time for over-current pulses to avoid reporting false fault conditions. During plug in or when the output capacitor has been discharged, the system may experience momentary large currents greater than the programmed current limit. The device will ignore these events if they are less than 12ms (t_{OCP_FLTB}).

Short-Circuit Protection (SCP)

When VOUT drops 270mV (V_{SC_DETECT}) below VIN the system interprets that as a V_{OUT} shorted to GND condition. From that point it takes 1µs ($t_{SC_RESPONSE}$) to respond and open the switch which will isolate VIN from VOUT.

True Reverse-Current Blocking Protection (TRCB)

True reverse-current blocking prevents undesired current flow from output to input when power switch is in either on or off state. When device is enabled, power switch is quickly turned off whenever output voltage is higher than input voltage by 25mV (typical). The power switch is turned on again when output voltage falls below input by 40mV.

Soft Start

The AOZ1356DI has internal soft-start circuitry to limit in-rush current due to large capacitive load. The turn-on (t_{ON}) time is 2.7ms.

Fast Turn-On

The FON pin allows the power switch to turn-on quickly. FON should be asserted before device is enabled.

If VIN>VOUT, the power switch turns on quickly by minimizing turn on delay and disables over-current protection.

Fast Recovery from TRCB

Once TRCB event is removed, power switch turns on again quickly. The recovery time is 80µs typ.

Fast Role Swap (FRS) Support

The Fast Turn-On and Fast Recovery from TRCB allows AOZ1356DI to support Fast Role Swap operation defined in USB Power Delivery Specification Rev 3.0. It allows system to change its role from power consumer to power provider and recover VOUT voltage to >4.75V in less than 80µs typ. FRS support would be active if FON = 5V.

Thermal Shutdown Protection

Thermal shutdown protects device from excessive temperature. The power switch is turned off when the die temperature reaches thermal shutdown threshold of 140°C. There is a 20°C hysteresis. For AOZ1356DI-01, -05 power switch is allowed to turn on again if die temperature drops below approximately 120°C.

Startup

The device is enabled when EN ≥ V_{EN_H} and input voltage is above UVLO threshold. The device first checks if any fault condition exists. When no fault exists, the power switch is turned on and the output is then ramped up. Power switch is kept off if fault condition was detected.

Fault Reporting

AOZ1356DI protects itself and load from the following fault condition: over-voltage, over-current, reverse-current, and over-temperature.

The FLTB pin is an open drain output. It is asserted low when either an over-current, or over-temperature condition occurs. The FLTB pin becomes high impedance when the fault conditions are removed. A pull-up resistor (R_{FLTB}) must be connected between FLTB to 5V to provide a logic signal (RFLTB) must be connected between FLTB to 5V to provide a logic signal.

When thermal shutdown is activated, FLTB is pulled low immediately to report fault condition to host. FLTB become impedance again once fault is removed.

In case of output overload, FLTB pin is pulled low about 12ms (t_{OCP_FLTB}) after device is in current-limiting. There is no fault reporting for UVLO, OVP and TRCB event.

Auto-restart or Latch-off

AOZ1356DI-01, -05 (auto-restart version): The device will try to restart 24ms after the power switch is turned off and when OVP or thermal shutdown fault is removed.

Power switch is turned on immediately after a TRCB event is removed.

AOZ1356LI-02, -06 (latch-off version): The device keeps off even after the fault condition is removed. Power switch can only be turned on again by either toggle EN pin or recycle the input supply.

Input Capacitor Selection

The input capacitor prevents large voltage transients from appearing at the input, and provides the instantaneous current needed each time the switch turns on to charge output capacitors and to limit input voltage drop. It also prevents high-frequency noise on the power line from passing through to the output. The input capacitor should be located as close to the pin as possible. A minimum of 10µF ceramic capacitor should be used. However, higher capacitor value is strongly recommended to further reduce the transient voltage drop at the input.

Output Capacitor Selection

large load that it may encounter during system transient. This bulk capacitor must be large enough to supply fast transient load in order to prevent the output from dropping. The USB specification limits the capacitance on VBUS (VOUT) to a maximum of 10µF. In addition, there is an upper limit for output capacitor for AOZ1356DI-01 to ensure the output capacitor can be charged fully during start-up. This upper limit is set by the current limit level and soft-start time.

$$C_{out} = I_{LIM} \times (t_{ON} / VIN)$$

Power Dissipation Calculation

Calculate the power dissipation for normal load condition using the following equation:

$$Power\ Dissipated = R_{ON} \times (I_{OUT})^2$$

The worst case power dissipation occurs when the load current hits the current limit due to over-current. The power dissipation can be calculated using the following equation:

Power Dissipated = (VIN – VOUT) × I_{LIM}

Layout Guidelines

AOZ1356DI-01 is a protection switch designed to deliver high current. Layout is critical to remove the heat generated by this current. For the most efficient heat sinking, connect as much copper as possible to the exposed pad and then connect the exposed pad to ground potential.

On the top layer expand the exposed pad island as much as possible for optimal thermal performance. The exposed pad copper plane must be connected to ground. See example in Figure 31.

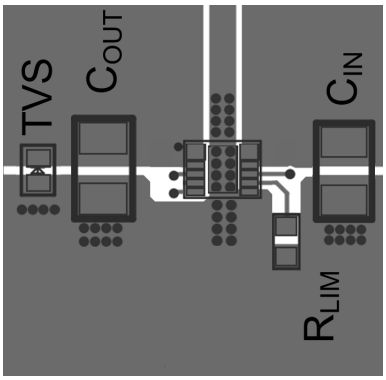

Figure 31. Top Layer

In addition to the top plane, if available, connect to the bottom layer ground plane for best thermal performance. See example in Figure 32.

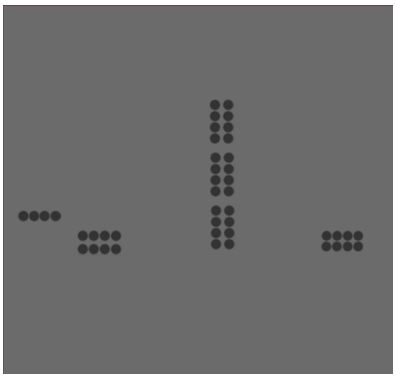

Figure 32. Bottom Layer

Package Dimensions, DFN3x3-12L

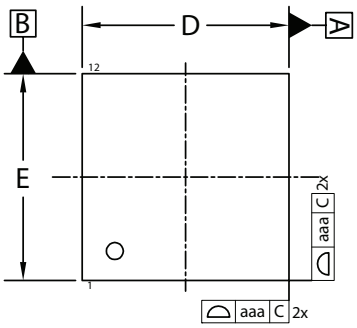

TOP VIEW

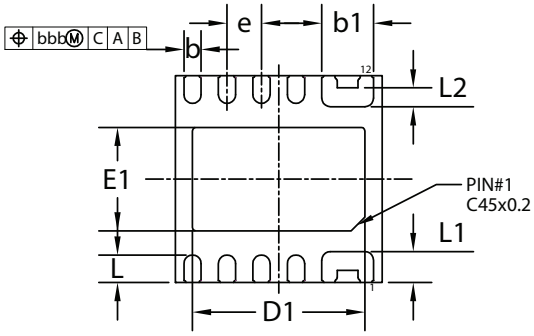

BOTTOM VIEW

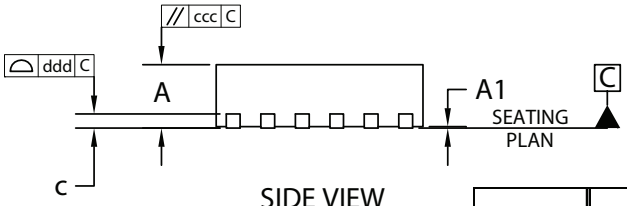

SIDE VIEW

RECOMMENDED LAND PATTERN

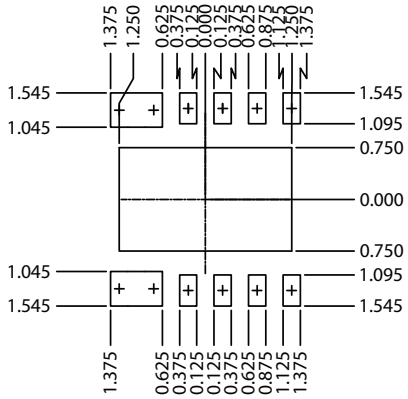

UNIT: mm

SYMBOLS	DIMENSION IN MM			DIMENSION IN INCHES		
	MIN	NOM	MAX	MIN	NOM	MAX
A	0.800	0.900	1.000	0.031	0.035	0.039
A1	0.000	0.020	0.050	0.000	0.001	0.002
b	0.200	0.250	0.300	0.008	0.010	0.012
b1	0.700	0.750	0.800	0.028	0.030	0.031
c	0.195	0.203	0.211	0.008	0.008	0.008
D	2.900	3.000	3.100	0.114	0.118	0.122
D1	2.400	2.500	2.600	0.094	0.098	0.102
E	2.900	3.000	3.100	0.114	0.118	0.122
E1	1.400	1.500	1.600	0.055	0.059	0.063
e	0.500 BSC			0.020 BSC		
L	0.300	0.400	0.500	0.012	0.016	0.020
L1	0.350	0.450	0.550	0.014	0.018	0.022
L2	0.220	0.270	0.320	0.009	0.011	0.013
aaa	0.150			0.006		
bbb	0.100			0.004		
ccc	0.100			0.004		
ddd	0.080			0.003		

NOTE:

1. DIMENSIONING AND TOLERANCING CONFORM TO ASME Y14.5M-1994.
2. CONTROLLING DIMENSION IS MILLIMETER.
   CONVERTED INCH DIMENSIONS ARE NOT NECESSARILY EXACT.
3. DIMENSION b APPLIES TO METALLIZED TERMINAL AND IS MEASURED BETWEEN 0.15mm. AND 0.30mm FROM THE TERMINAL TIP. IF THE TERMINAL HAS THE OPTIONAL RADIUS ON THE OTHER END OF THE TERMINAL, THE DIMENSION b SHOULD NOT BE MEASURED IN THAT RADIUS AREA.
4. COPLANARITY ddd APPLIERS TO THE TERMINALS AND ALL OTHER BOTTOM SURFACE METALLIZATION.

Tape and Reel Drawing DFN3x3_EP

Carrier Tape

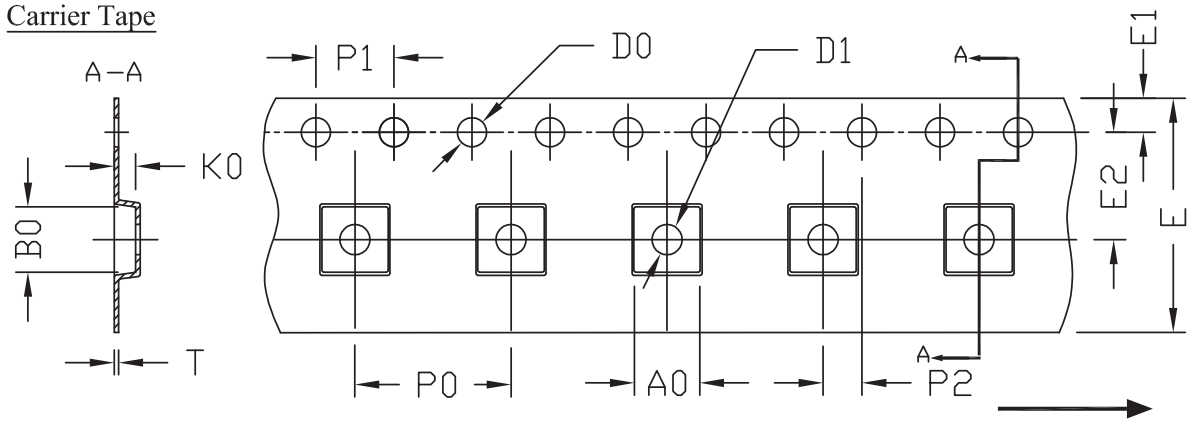

UNIT: MM

PACKAGE	A0	B0	K0	D0	D1	E	E1	E2	P0	P1	P2	T
DFN3x3_EP	3.40 ±0.10	3.35 ±0.10	1.10 ±0.10	1.50 +0.10 −0	1.50 +0.10 −0	12.00 ±0.30	1.75 ±0.10	5.50 ±0.05	8.00 ±0.10	4.00 ±0.10	2.00 ±0.05	0.30 ±0.05

REEL

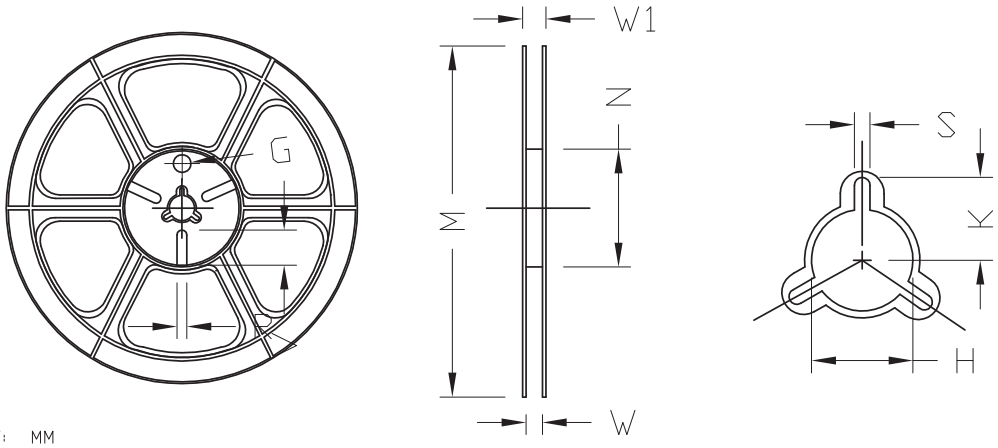

UNIT: MM

TAPE SIZE	REEL SIZE	M	N	W	W1	H	K	S	G	R	V
12 mm	ø330	ø330.00 ±0.50	ø97.00 ±0.10	13.00 ±0.30	17.40 ±1.00	ø13.00 +0.50 −0.20	10.60	2.00 ±0.50	---	---	---

TAPE

Leader / Trailer & Orientation

PIC

Unit Per Reel: 5000pcs

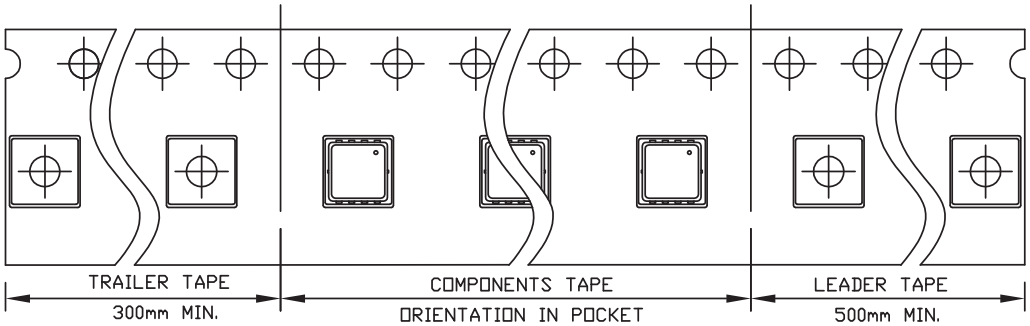

Part Marking

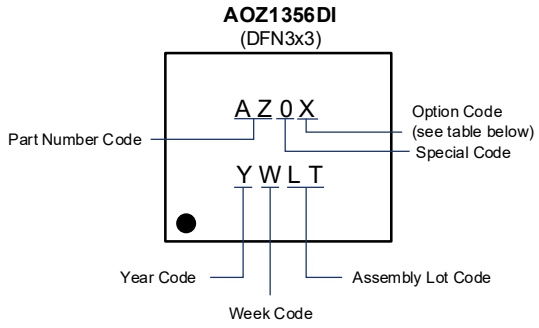

Part Number	Description	Code
AOZ1356DI-01	Green Product	AZ01
AOZ1356DI-02	Green Product	AZ02
AOZ1356DI-05	Green Product	AZ05
AOZ1356DI-06	Green Product	AZ06

LEGAL DISCLAIMER

Applications or uses as critical components in life support devices or systems are not authorized. Alpha and Omega Semiconductor does not assume any liability arising out of such applications or uses of its products. AOS reserves the right to make changes to product specifications without notice. It is the responsibility of the customer to evaluate suitability of the product for their intended application. Customer shall comply with applicable legal requirements, including all applicable export control rules, regulations and limitations.

AOS's products are provided subject to AOS's terms and conditions of sale which are set forth at:
http://www.aosmd.com/terms_and_conditions_of_sale

LIFE SUPPORT POLICY

ALPHA AND OMEGA SEMICONDUCTOR PRODUCTS ARE NOT AUTHORIZED FOR USE AS CRITICAL COMPONENTS IN LIFE SUPPORT DEVICES OR SYSTEMS.

As used herein:

1. Life support devices or systems are devices or systems which, (a) are intended for surgical implant into the body or (b) support or sustain life, and (c) whose failure to perform when properly used in accordance with instructions for use provided in the labeling, can be reasonably expected to result in a significant injury of the user.

2. A critical component in any component of a life support, device, or system whose failure to perform can be reasonably expected to cause the failure of the life support device or system, or to affect its safety or effectiveness.