AOZ1324DI

ECPower™ 20V 32mΩ Protection Switch with True Reverse Current Blocking

General Description

The AOZ1324DI power switch is intended for applications that require circuit protections. The input operating voltage ranges between 3.4V and 22V, making it ideal for USB Type-C power delivery applications. VIN and VOUT terminals are rated as 28V Absolute Maximum. The AOZ1324DI provides under-voltage lockout, over-voltage and over-temperature protection function. The over-voltage protection threshold is selectable by an external resistor. The internal soft-start circuitry controls inrush current due to highly capacitive loads. The slew rate can be adjusted using an external capacitor.

The AOZ1324DI has True Reverse-Current Blocking (TRCB) protection to avoid undesired reverse-current from VOUT to VIN at all time.

The AOZ1324DI is available in a 3mm x 3mm DFN-12 package which can operate over -40°C to +85°C temperature range.

Features

- 32mΩ typical ON resistance
- 3.4V to 22V operating input voltage
- VIN and VOUT are rated 28V Abs max.
- True reverse current blocking when VOUT > VIN
- Selectable over-voltage protection
- Programmable soft-start
- VIN under-voltage lockout
- VIN over-voltage lockout
- Thermal shutdown protection
- Short-circuit protection
- ±4kV HBM ESD rating
- ±8kV HBM ESD rating for VIN and VOUT
- IEC61000-4-2: ±8kV on VIN
- IEC61000-4-5: 40V on VIN, No Capacitor
- 3mm x 3mm DFN-12L package

Applications

- Thunderbolt/USB Type-C PD power switch
- Portable devices
- Notebook/desktop computers
- Monitors
- Docking station/dongles

Green Product

Typical Application

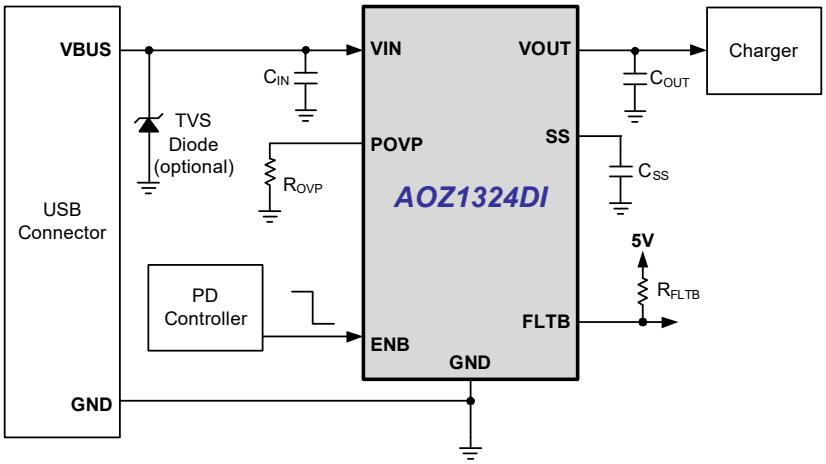

Ordering Information

Part Number	Fault Recovery	Temperature Range	Package	Environmental
AOZ1324DI-01	Auto-Restart	-40°C to +85°C	3mm x 3mm DFN-12L	RoHS
AOZ1324DI-02	Latch-Off	-40°C to +85°C	3mm x 3mm DFN-12L	RoHS

All AOS products are offered in packages with Pb-free plating and compliant to RoHS standards.

Pin Configuration

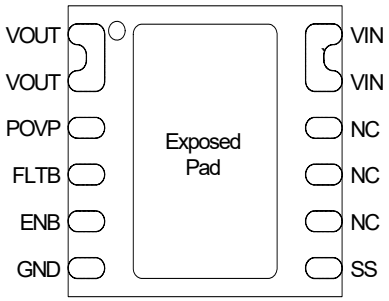

3mm x 3mm DFN-12L
(Top Transparent View)

Pin Description

Pin Number	Pin Name	Pin Function
1, 2	VOUT	Output pins. Connect to internal load.
3	POVP	Programmable over voltage protection. Connect a resistor R_{OVP} from POVP to GND.
4	FLTB	Fault Indicator, Open-drain output. Active Low when fault condition occurs.
5	ENB	Enable logic input. Active-low.
6	GND	Ground.
7	SS	Soft-start pin. Connect a capacitor C_{SS} from SS to GND to set the soft-start time.
8, 9, 10	NC	No connect. Leave these pins float.
11, 12	VIN	Connect to adapter or power input.
EXP	EXP	Exposed Thermal Pad. Common Drain of Power Switches. It must be a floating node. Solder to a metal surface directly underneath EXP and connect to floating copper thermal pads on multiple PCB layers through VIAs. For best thermal performance make the floating copper pads as large as possible and connect to EXP with multiple VIAs.

Absolute Maximum Ratings

Exceeding the Absolute Maximum ratings may damage the device.

Parameter	Rating
VIN, VOUT to GND	-0.3V to +28V
ENB, SS, FLTB, POVP to GND	-0.3V to +6V
Junction Temperature (T_J)	+150°C
Storage Temperature (T_S)	-65°C to +150°C
ESD Rating HBM All Pins	±4kV
ESD Rating HBM VIN and VOUT Pins	±8kV

Recommend Operating Ratings

The device is not guaranteed to operate beyond the Maximum Operating Ratings.

Parameter	Rating
Supply Voltage VIN	3.4V to 22V
ENB, FLTB, SS	0V to 5.5V
POVP	0V to 3V
DC Switch Current (I_{SW})	0A to 3.5A
Ambient Temperature (T_A)	-40°C to +85°C
Package Thermal Resistance 3x3 DFN-12 (Θ_{JA})	36°C/W

Electrical Characteristics

T_A = 25°C, VIN = 20V, ENB = 0V, R_{OVP}=19.6kΩ, unless otherwise specified.

Symbol	Parameter	Conditions	Min.	Typ.	Max.	Units
V_{VIN}	Input Supply Voltage		3.4		22	V
V_{UVLO}	Under-voltage Lockout Threshold	VIN rising	3.0		3.35	V
V_{UVLO_HYS}	Under-voltage Lockout Hysteresis			300		mV
V_{OVLO}	Overvoltage Lockout Threshold	POVP = 0V, VIN rising	23.0	24.0	25.0	V
		POVP = OPEN, VIN rising	5.5	5.8	6	
V_{OVLO_HYS}	Overvoltage Lockout Hysteresis			300		mV
t_{DELAY_OVP}	Switch Turn-off Delay upon Over-voltage	V_{VIN} - V_{OLVO} = 500mV		1.5		µs
I_{VIN_ON}	Input Quiescent Current	I_{VOUT} = 0		550		µA
I_{VIN_OFF}	Input Shutdown Current	I_{VOUT} = 0, ENB= 5V		18	35	µA
I_{VOUT_OFF}	Output Leakage Current	VOUT = 20V, VIN = 0V, ENB=5V		18	35	µA
R_{ON_20V}	Switch ON-Resistance	I_{VOUT} = 1A		32		mΩ
R_{ON_5V}		VIN= 5V, I_{VOUT} = 1A		33.5		mΩ
V_{ENB_H}	ENB Pin Input High Threshold	ENB rising			1.4	V
V_{ENB_L}	ENB Pin Input Low Threshold	ENB falling	0.6			V
I_{ENB_BIAS}	ENB Pin Input Pull-down Current	ENB= 1.8 V			10	µA
V_{FLTB_LO}	FLTB Pin Pull-down Voltage	FLTB sinking 3mA			0.3	V
V_{TRCB}	TRCB Threshold	VOUT-VIN		26		mV
t_{TRCB}	TRCB Delay Time	VOUT-VIN= V_{TRCB} + 500mV		500		ns
t_{D_ON}	Turn-On Delay Time ENB to VOUT (10%)	From ENB falling edge to VOUT reaching 10% of VIN. C_{OUT}= 68µF, C_{SS}= 5.6nF		21		ms
t_{ON}	Turn-On Rise Time	VOUT from 10% to 90% C_{OUT} = 68uF, C_{SS} = 5.6nF		1.2		ms
t_{REC}	Auto restart interval	AOZ1324DI-01 only		64		ms
T_{SD}	Thermal Shutdown Threshold			140		°C
T_{SD_HYS}	Thermal Shutdown Hysteresis			30		°C

Functional Block Diagram

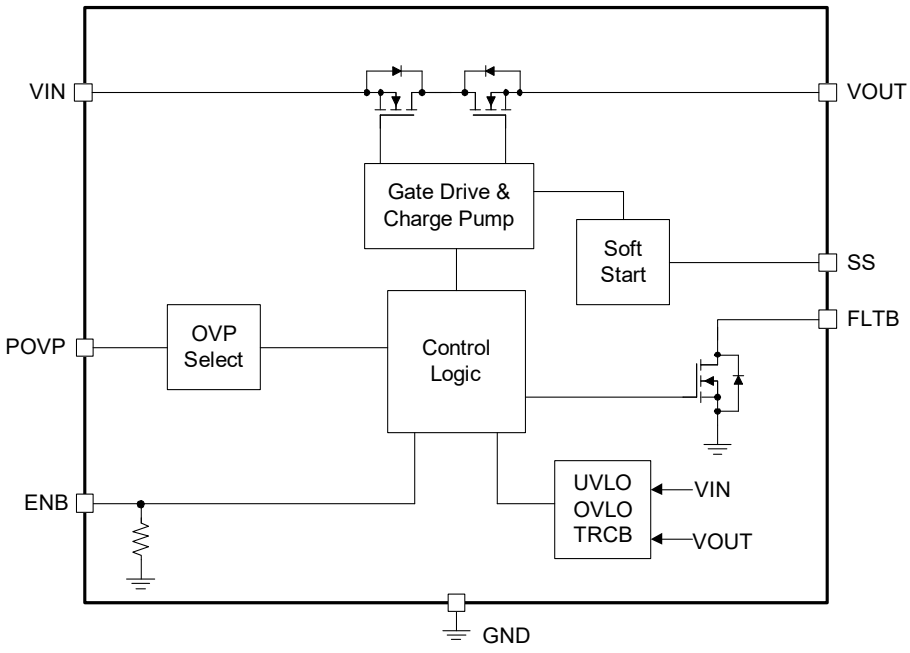

Timing Diagrams

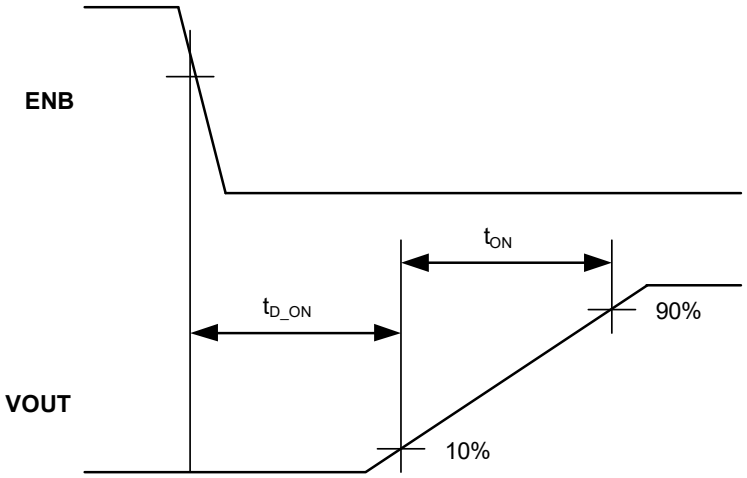

Figure 1. Turn-on Delay and Turn-on Time

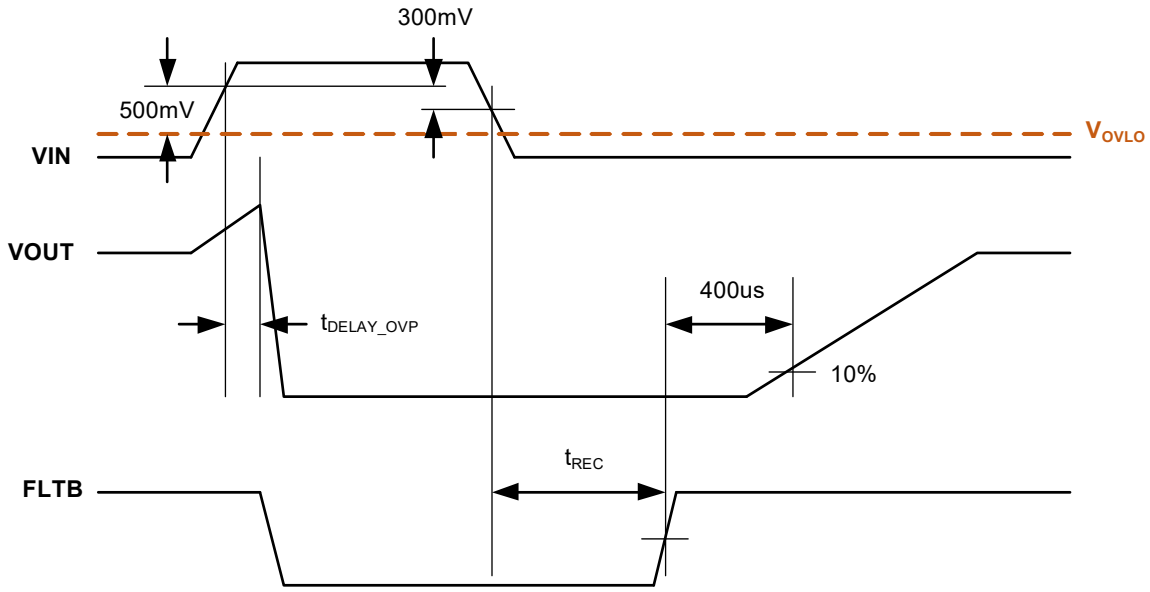

Figure 2. OVP Delay and Recovery Time (AOZ1324DI-01)

Typical Characteristics

C_{IN} = 20µF, C_{OUT}=120µF, R_{LOAD}=100Ω, C_{SS}=5.6nF, R_{OVP}=19.6kΩ, T_A = 25°C unless otherwise specified.

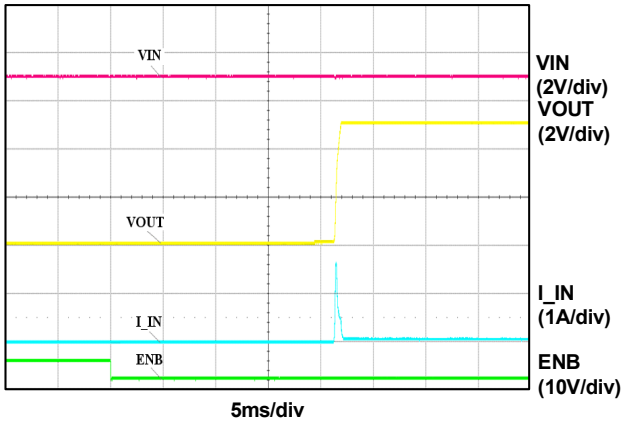

Figure 3. Soft Start Delay Times (VIN=5V)

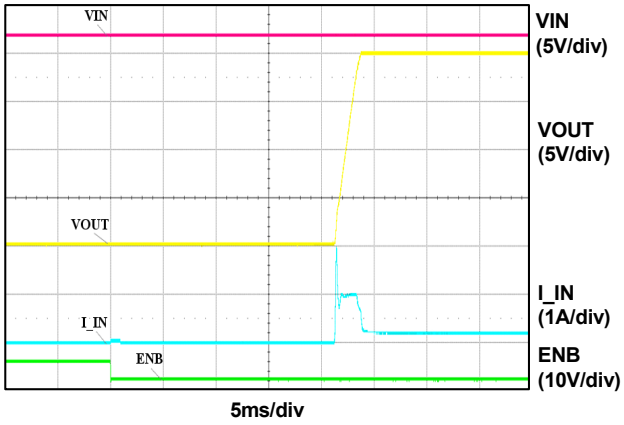

Figure 4. Soft Start Delay Times (VIN=20V)

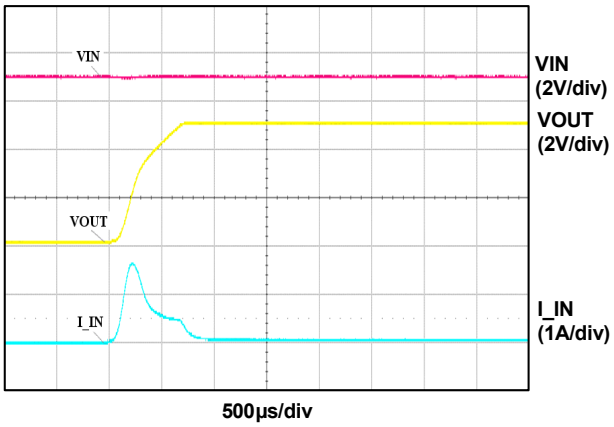

Figure 5. Soft Start Ramp (VIN=5V)

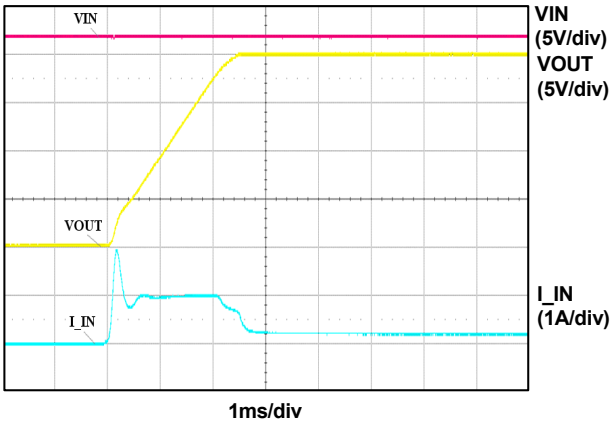

Figure 6. Soft Start Ramp (VIN=20V)

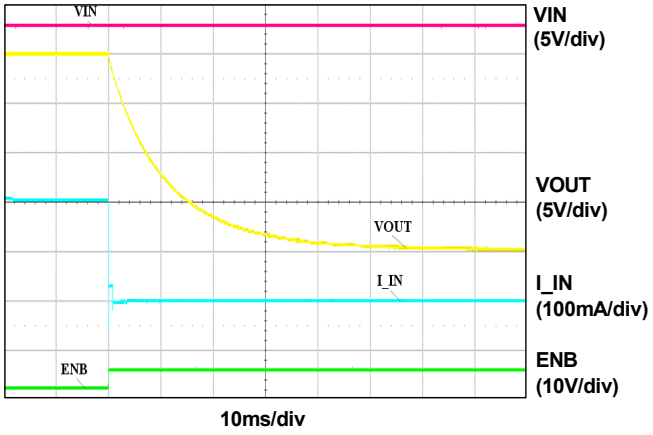

Figure 7. Shutdown (VIN=20V)

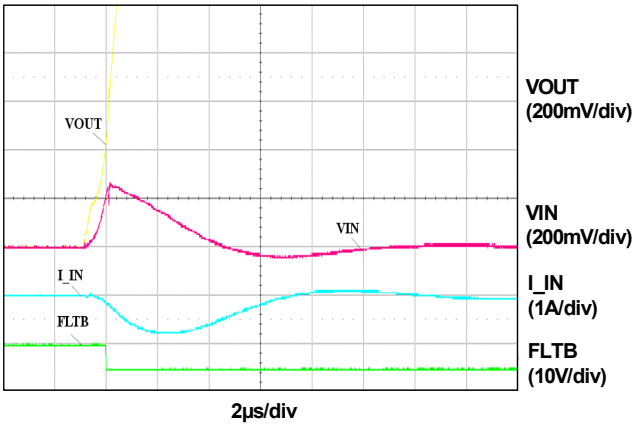

Figure 8. Reverse Current Blocking (VIN=5V)

Typical Characteristics (Continued)

C_{IN} = 20µF, C_{OUT}=120µF, R_{LOAD}=100Ω, C_{SS}=5.6nF, R_{OVP}=19.6kΩ, T_A = 25°C unless otherwise specified.

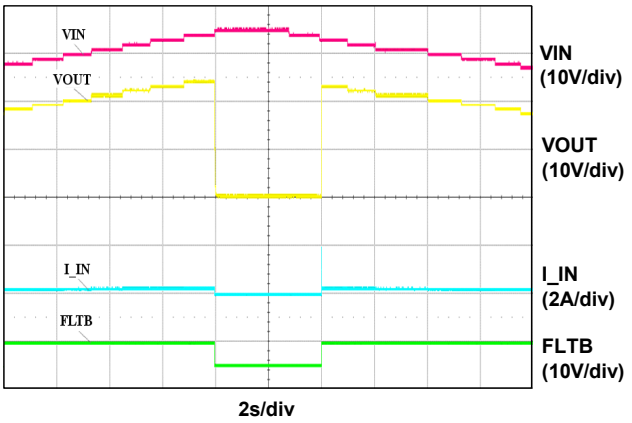

Figure 9. Over Voltage Protection (Option -01)

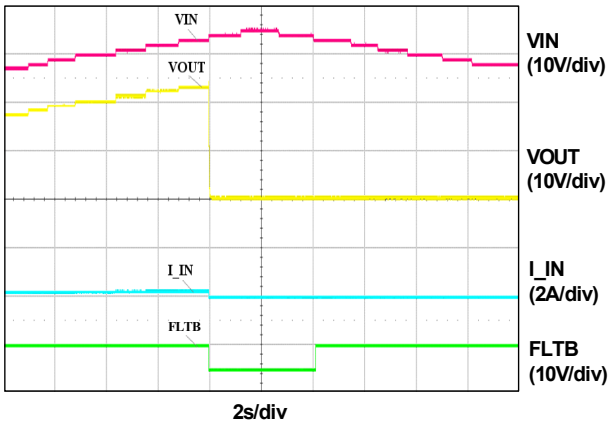

Figure 10. Over Voltage Protection (Option -02)

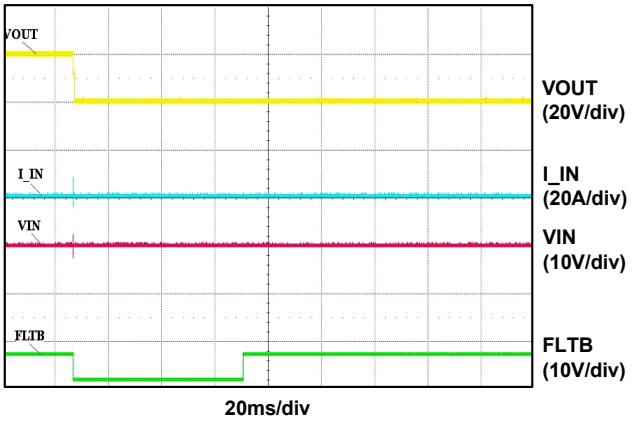

Figure 11. Short Circuit Protection (C_{SS}= 1nF, No Load, Option -01)

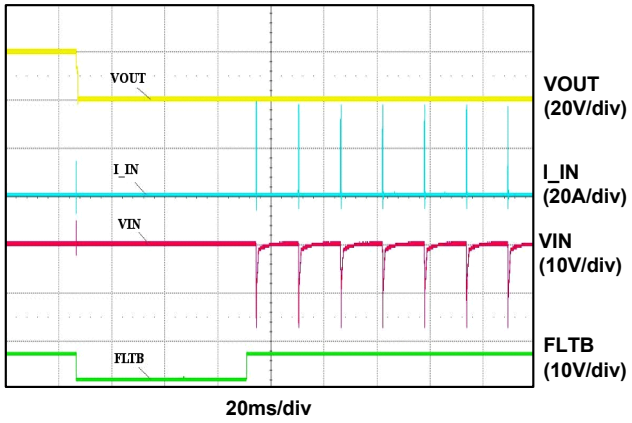

Figure 12. Short Circuit Protection (C_{SS}=1nF, No Load, Option -02)

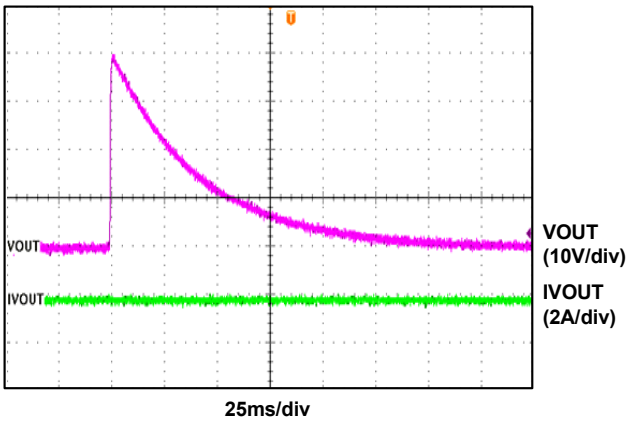

Figure 13. IEC61000-4-5: 40V Surge Voltage without Device

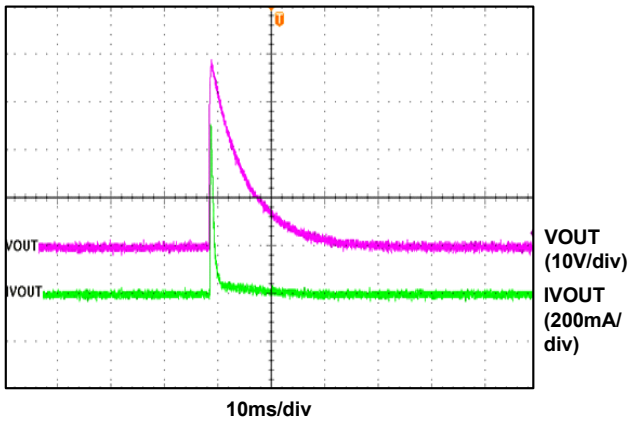

Figure 14. IEC6100-4-5: 40V Surge Voltage with Device (No Capacitor on VIN)

Typical Characteristics (Continued)

T_A = 25°C, unless otherwise specified.

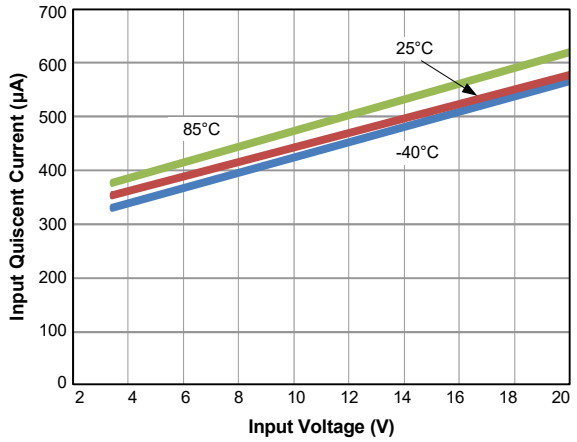

Figure 15. Quiescent Current vs. Input Voltage

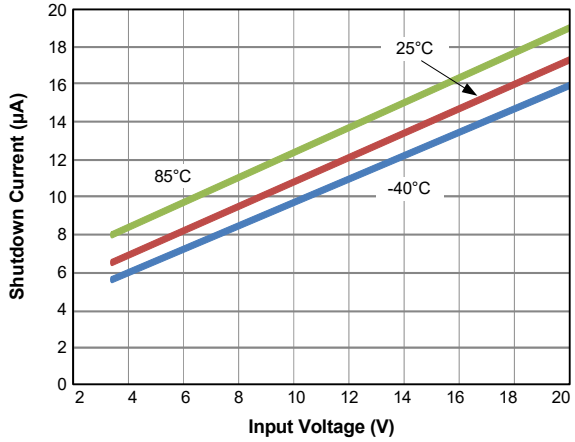

Figure 16. Shutdown Current vs. Input Voltage

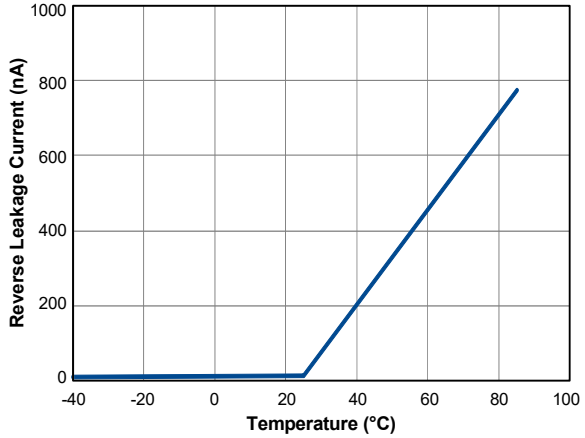

Figure 17. Reverse Leakage Current vs. Temperature

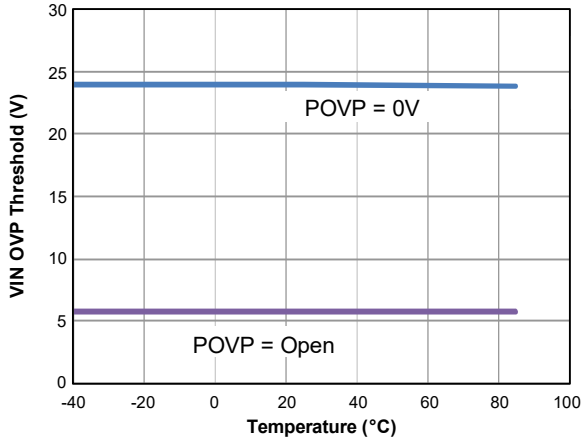

Figure 18. VIN OVP vs. Temperature (I_{VOUT}=1A)

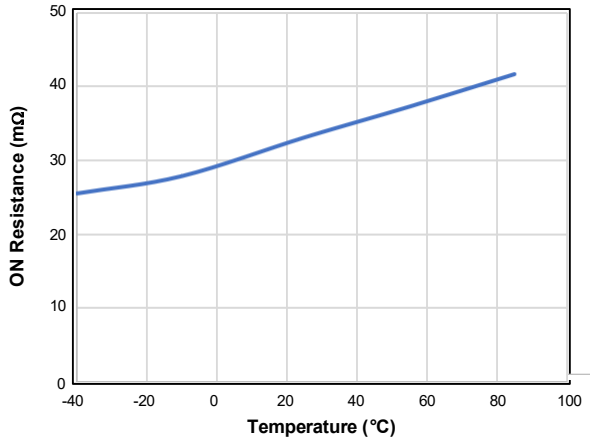

Figure 19. On Resistance vs. Temperature

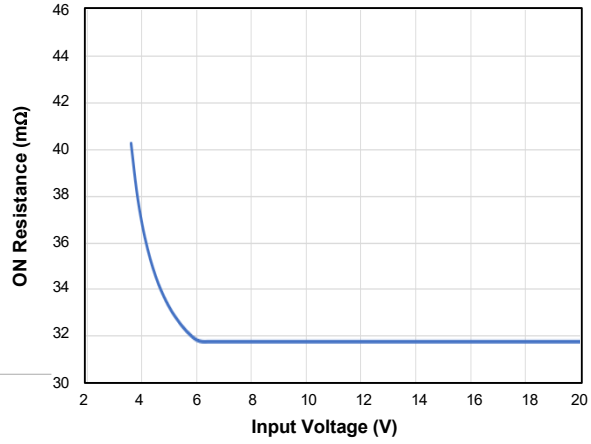

Figure 20. ON Resistance vs. VIN (I_{VOUT}=1A)

Detailed Description

The AOZ1324DI is a high-side protection switch with adjustable soft-start, over-voltage and over-temperature protections. It is capable of operating from 3.4V to 22V.

The internal power switch consists of 2 back-to-back connected N-channel MOSFETs. When the switch is enabled, the overall resistance between VIN and VOUT is only 32mΩ typical, minimizing power loss and heat generation. The back-to-back configuration of MOSFETs completely isolates VIN and VOUT when the switch is turned off, preventing leakage between the two pins.

Enable

The active-low ENB pin is the ON/OFF control for the power switch. The device is enabled when the ENB pin is low and the device is not in UVLO state. The ENB pin must be driven to a logic low or logic high state to guarantee operation. While disabled, the AOZ1324DI draws about 18µA supply current.

When fault occurs for AOZ1324DI-02 latch-off version, toggle enable to restart the device and clear fault indicator.

Input Under-Voltage Lockout (UVLO)

The internal circuitry of the AOZ1324DI is powered from VIN. The under-voltage lockout (UVLO) circuit of the AOZ1324DI monitors the voltage at the input pin and only allows the power switches to turn on when VIN is higher than 3.4V. If VIN is below 3.4V, the device is in under-voltage lockout state.

Programmable Over-Voltage Protection (OVP)

The voltages at VIN pin are constantly monitored once the device is enabled. In case the voltage exceeds the programmed threshold, over-voltage protection is activated:

1. If the power switch is on, it will be turned off immediately to isolate VOUT from VIN

2. OVP will prevent power switch to be turned on if it is in off state.

In either case FLTB pin is pulled low to report the fault condition.

An external Bias connected to POVP sets the over-voltage protection threshold. An internal 8µA current source biases POVP pin. The voltage at POVP pin is detected by comparators that sets the OVP threshold based on the table below:

POVP Bias	OVP Threshold
0V	24V
Open	5.8V

Table 1. OVP Setting by External Resistor

True Reverse Current Blocking (TRCB)

The AOZ1324DI immediately turns off the power switch upon detection of a VOUT that is 26mV higher than VIN. The FLTB pin will also be immediately pulled low to indicate the fault condition.

When the AOZ1324DI is first enabled or during each auto restart, power switch will be kept off if output voltage exceeds input voltage by 26mV.

Thermal Shutdown Protection

When the die temperature reaches 140°C the power switch is turned off. There is a 30°C hysteresis. Over-temperature fault is removed when die temperature drops below approximately 110°C.

Soft-Start Slew-Rate Control

When ENB pin is asserted low, the slew rate control circuitry applies voltage on the gate of the power switch in a manner such that the output voltage is ramped up linearly until it reaches input voltage level. The output ramp up time depends on the VIN and POVP setting and is programmed by an external soft-start capacitor (Css). The following formula provides the estimated 10% to 90% ramp up time.

$$t_{SS} = \left(\frac{V_{VIN}}{V_{OVP}}\right) \times \left(\left(\frac{C_{SS}}{0.0023}\right) - 100\right)$$

Where VIN and VOVP are in volts and C_{SS} is in nF. t_{SS} value is provided in µs.

For example, if VIN=20V, VOVP=24V and C_{SS}=2.7nF, the VOUT ramp up time is 895µs.

System Startup

The device is enabled when ENB ≤ 0.6V and VIN is higher than UVLO threshold. The OVP threshold is first selected by sensing POVP voltage. The device will then check if fault condition exist. When no fault exists, the power switch is turned on and VOUT is then ramped up, controlled by the soft-start till it reaches the input voltage.

Fault Protection

The AOZ1324DI offers protection against the following fault conditions: VIN over voltage, VOUT being higher than VIN, and over temperature.

When the device is first enabled, the power switch is off and fault conditions are checked. If VIN is higher than the OVP threshold, or VOUT is higher than VIN by 26mV (typical), or the die temperature is higher than thermal shutdown threshold, the FLTB pin will be pulled low to flag the fault. After the power switch turns on, the device continuously monitors all fault conditions.

Auto-Restart vs. Latch-Off

AOZ1324DI-01 (auto-restart version):

If the power switch is turned off due to fault protection, the device will try to restart 64ms (t_{REC}) after the fault clears.

AOZ1324DI-02 (latch-off version):

The power switch keeps off even after the fault clears. The device can only be re-enabled by either toggling ENB pin or cycling the input power supply.

Input Capacitor Selection

The input capacitor prevents large voltage transients from appearing at the input, and provides the instantaneous current needed each time the switch turns on to charge output capacitors and to limit input voltage drop. It is also to prevent high-frequency noise on the power line from passing through to the output. The input capacitor should be located as close to the pin as possible. A 10µF ceramic capacitor is recommended. However, higher capacitor values further reduce the transient voltage drop at the input.

Output Capacitor Selection

The output capacitor acts in a similar way. Also, the output capacitor has to supply enough current for a large load that it may encounter during system transient. This bulk capacitance must be large enough to supply fast transient load in order to prevent the output from dropping.

If the output capacitance is so high that at the end of the soft start output voltage is lower than input voltage by approximately 300mV or more, the power switch will be turned off to protect itself.

Power Dissipation Calculation

Use the following equation to calculate the power dissipation for normal load condition:

$$Power\ Dissipated = R_{ON} \times (I_{OUT})^2$$

Layout Guidelines

The exposed thermal pad transfers heat from the AOZ1324DI to the PCB. It is a floating node, no electrical connections allowed. In order to transfer heat from the device as quick as possible, put a thermal copper pad directly beneath the exposed pad. Make the pad as large as the exposed pad. Extend out the top of the device for better heat sinking capability. For more effective heat sinking, attach the exposed pad to as many layers as possible (inner layers and the back side of the PCB). Attach it through the maximum number of VIAs as allowed within the exposed pad area.

The output and input capacitors (COUT and CIN) should be placed as close as possible to their respective pins (VOUT and VIN). This reduces transient under/ overshoots due to load or line transients to a minimum.

Any TVS or Schottky diode should be placed as close to the device as possible and next to the input and output capacitors. The large plane connects the VIN, VOUT and device grounds. Make the ground plane broad and continuous (no cut or breaks) along the bottom of the device to eliminate ground loop noise and reduce transient under and overshoots. The device ground pin (Pin 6), the COUT, and the CIN ground connections should connect directly to the ground plane. Do not route through any narrow traces before connecting to the ground plane main body.

The VIN and VOUT pins conducts large currents. Make sure the VIN and VOUT planes are as broad as possible.

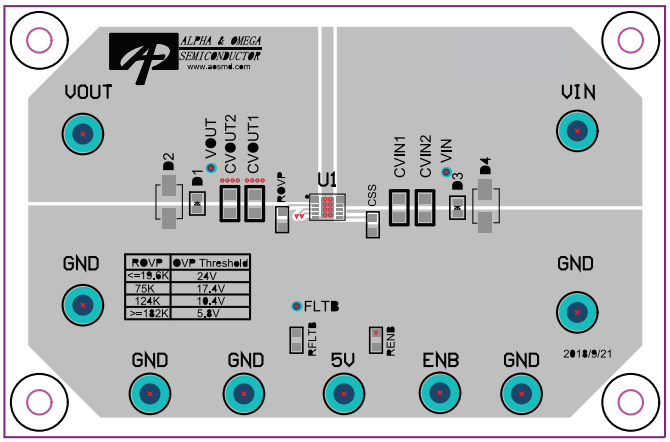

Figure 21. AOZ1324DI Evaluation Board Layout

Package Dimensions, DFN3x3B-12L, EP1_S

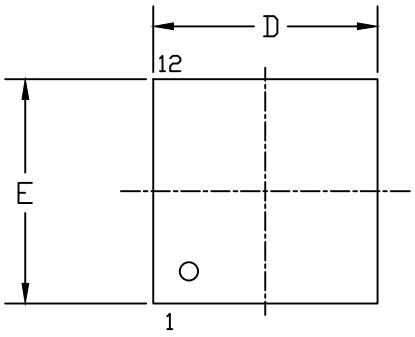

TOP VIEW

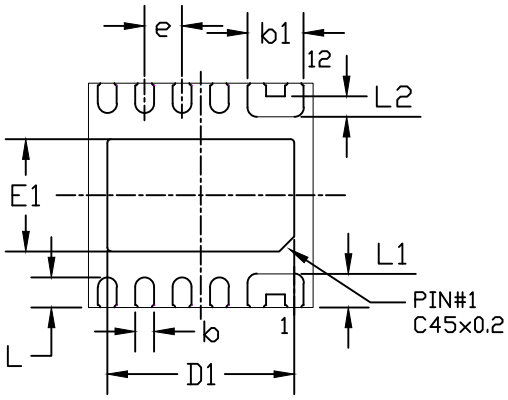

BOTTOM VIEW

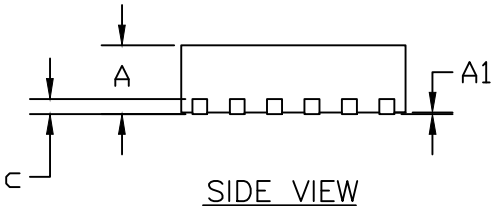

SIDE VIEW

RECOMMENDED LAND PATTERN

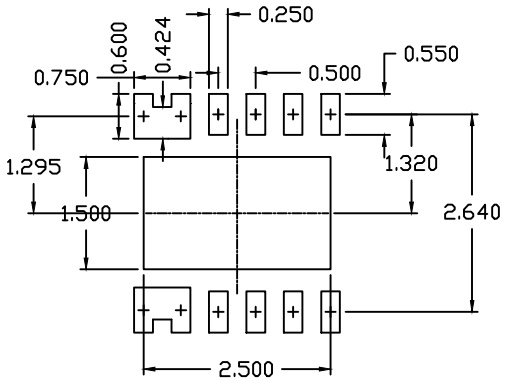

UNIT: mm

SYMBOLS	DIMENSIONS IN MILLIMETERS			DIMENSIONS IN INCHES		
	MIN	NOM	MAX	MIN	NOM	MAX
A	0.80	0.90	1.00	0.031	0.035	0.039
A1	0.00	0.02	0.05	0.000	0.001	0.002
b	0.20	0.25	0.30	0.008	0.010	0.012
b1	0.70	0.75	0.80	0.028	0.030	0.032
c	0.195	0.203	0.211	0.008	0.008	0.008
D	2.90	3.00	3.10	0.114	0.118	0.122
D1	2.40	2.50	2.60	0.094	0.098	0.102
E	2.90	3.00	3.10	0.114	0.118	0.122
E1	1.40	1.50	1.60	0.055	0.059	0.063
e		0.50BSC			0.020BSC	
L	0.30	0.40	0.50	0.012	0.016	0.020
L1	0.35	0.45	0.55	0.014	0.018	0.022
L2	0.22	0.27	0.32	0.009	0.011	0.013

RECOMMENDED STENCIL DESIGN

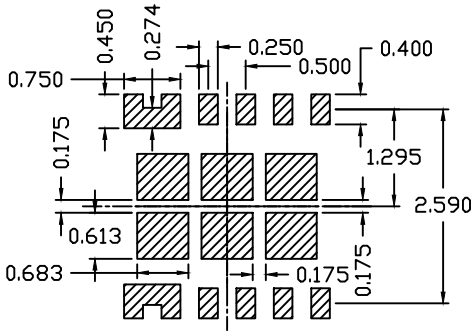

UNIT: mm

NOTE

1. DIMENSIONING AND TOLERANCING CONFORM TO ASME Y14.5M-199
2. CONTROLLING DIMENSION IS MILLIMETER CONVERTED INCH DIMENSIONS ARE NOT NECESSARILY EXACT.

Tape and Reel Dimensions, DFN3x3B-12L, EP1_S

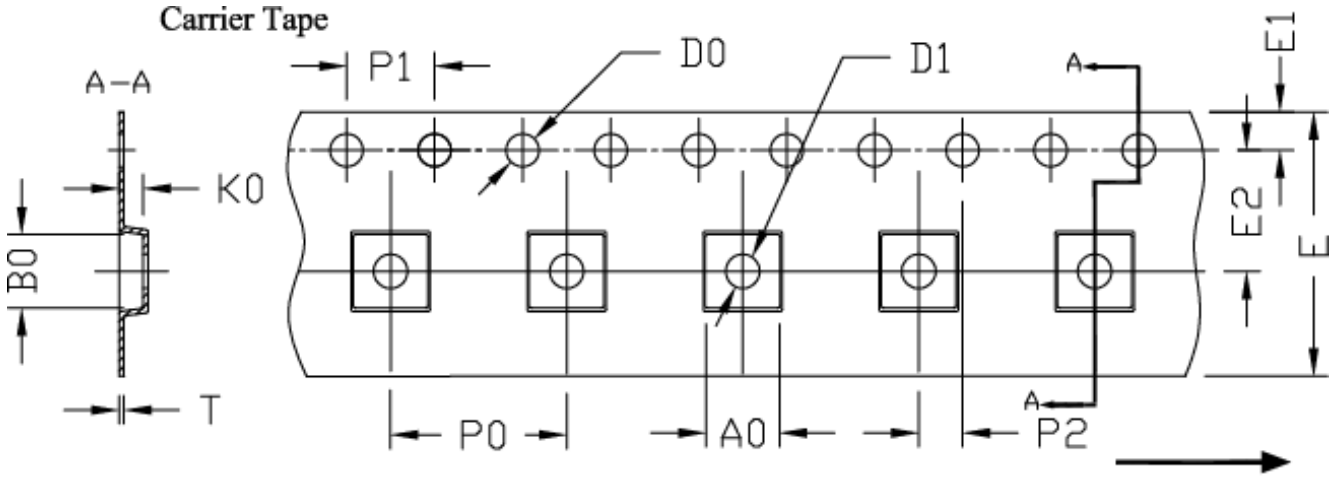

UNIT: MM

PACKAGE	A0	B0	K0	D0	D1	E	E1	E2	P0	P1	P2	T
DFN3x3_EP	3.40 ±0.10	3.35 ±0.10	1.10 ±0.10	1.50 +0.10 −0	1.50 +0.10 −0	12.00 ±0.30	1.75 ±0.10	5.50 ±0.05	8.00 ±0.10	4.00 ±0.10	2.00 ±0.05	0.30 ±0.05

REEL

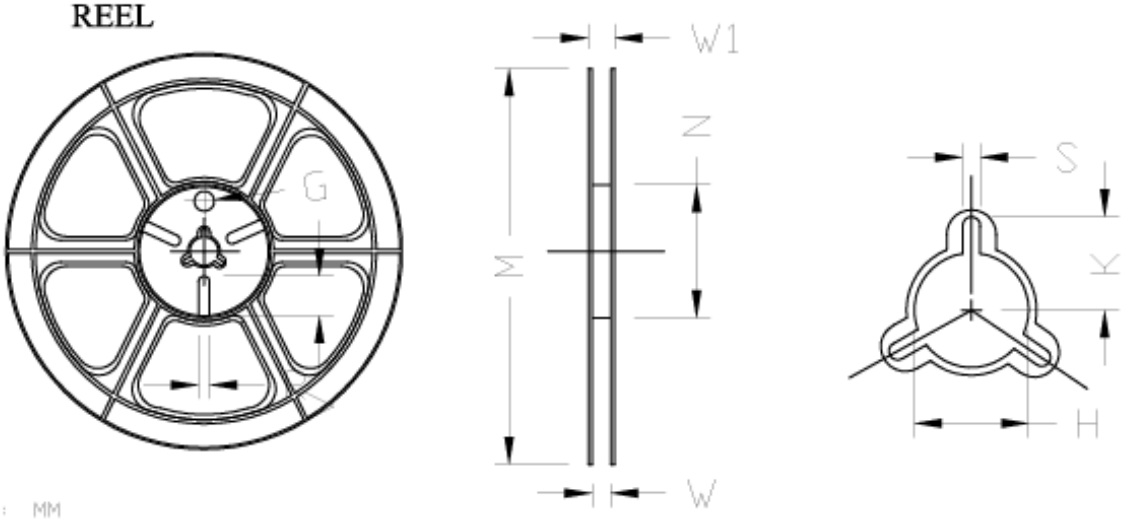

UNIT: MM

TAPE SIZE	REEL SIZE	M	N	W	W1	H	K	S	G	R	V
12 mm	ø330	ø330.00 ±0.50	ø97.00 ±0.10	13.00 ±0.30	17.40 ±1.00	ø13.00 +0.50 −0.20	10.60	2.00 ±0.50	---	---	---

Tape and Reel Dimensions, DFN3x3B-12L, EP1_S

TAPE
Leader / Trailer & Orientation

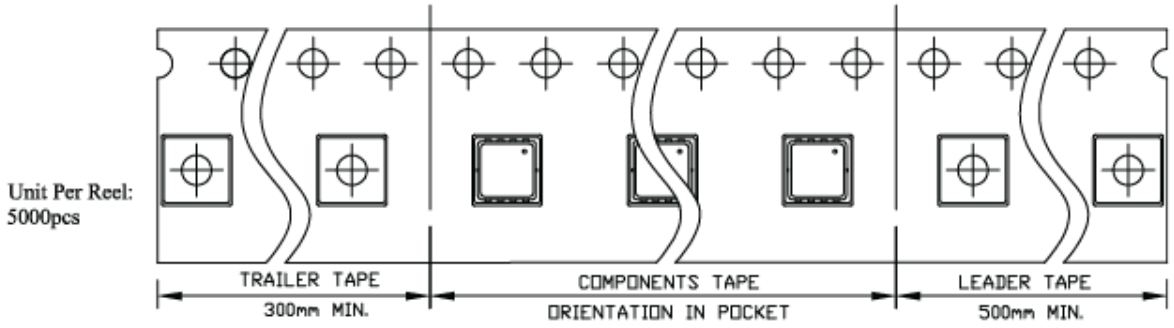

Part Marking

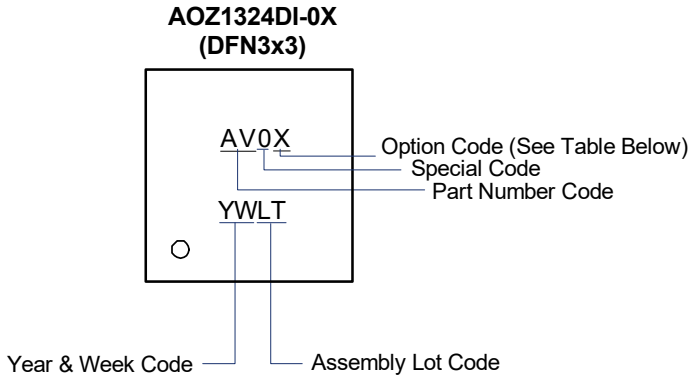

Part Number	Description	Code
AOZ1324DI-01	Green Product	AV01
AOZ1324DI-02	Green Product	AV02

LEGAL DISCLAIMER

Applications or uses as critical components in life support devices or systems are not authorized. AOS does not assume any liability arising out of such applications or uses of its products. AOS reserves the right to make changes to product specifications without notice. It is the responsibility of the customer to evaluate suitability of the product for their intended application. Customer shall comply with applicable legal requirements, including all applicable export control rules, regulations and limitations.

AOS' products are provided subject to AOS' terms and conditions of sale which are set forth at:
http://www.aosmd.com/terms_and_conditions_of_sale

LIFE SUPPORT POLICY

ALPHA AND OMEGA SEMICONDUCTOR PRODUCTS ARE NOT AUTHORIZED FOR USE AS CRITICAL COMPONENTS IN LIFE SUPPORT DEVICES OR SYSTEMS.

As used herein:

1. Life support devices or systems are devices or systems which, (a) are intended for surgical implant into the body or (b) support or sustain life, and (c) whose failure to perform when properly used in accordance with instructions for use provided in the labeling, can be reasonably expected to result in a significant injury of the user.

2. A critical component in any component of a life support, device, or system whose failure to perform can be reasonably expected to cause the failure of the life support device or system, or to affect its safety or effectiveness.